AIC Power Solutions Overview

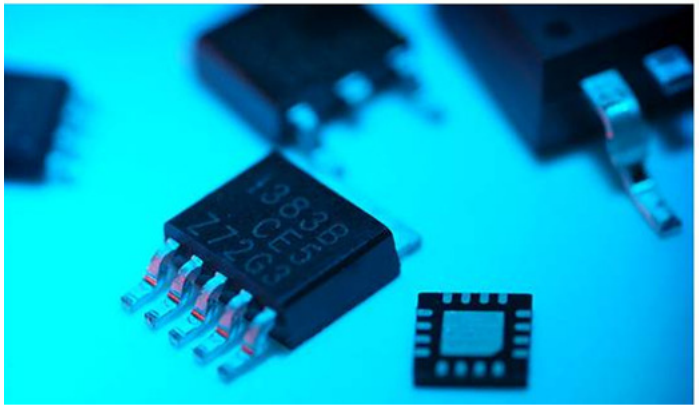

PRODUCT PORTFOLIO

Power Conversion

- Linear Voltage Regulator
- DC/DC Converter ★★★★★
- White-LED Driver
- LED Lighting Driver ★★★

Power Manipulation

- Supervisory
- Battery Management
- Power Switch ★★
- High Current Driver

POWER CONVERSION

Linear Voltage Regulator	DC/DC Converter
• Low Dropout Linear Regulator • Ultra Low Dropout Linear Regulator • Negative Voltage Regulator • Voltage Reference • DDR Regulator • Fan Control Driver	• Step - Up • Inverting • Charge - Pump • Step - Down • Multiple Output
White-LED Driver	**LED Lighting Solution**
• Charge - Pump • Boost Converter • Buck Converter • Constant Current Switcher	• Off - Line Linear • Step – Down • AC/DC

POWER MANIPULATION

aic

Supervisory	Battery Management
• Microprocessor Reset Circuits • Reset Circuits with Manual Reset Input	• NiMH/NiCd Charger • Li-Ion Charger • Li-ion Protection
Power Switch	**Others**
• Universal Power Switch • USB Power Switch	• High Current Driver • Universal DC/DC Converter • Universal AC/DC Converter

Buck Converters

AIC28xx/23xx/22xx Series

Output Current		≤1.5A	≤2A	≤3A	≤5A
HV Buck	Vin up to 36V			AIC2893 AOT	
HV Buck	Vin up to 23V		AIC2822 AIC2857F AIC2862	AIC2823 AIC2858F AIC2863	
HV Buck	Vin up to 16V		AIC2832 AIC2852 AIC2880	AIC2833(FC) AIC2873 AOT	AIC2868(8A) AOT AIC2866(6A) AOT AIC2865(5A) AIC2864(4A)
LV Buck	Vin up to 6V	AIC2259 AOT AIC2354 AIC2385 AIC2359(Dual) AOT AIC2258 AOT AIC2256 AOT AIC2253 AOT AIC2140 Ultra Low Iq 0.35uA	AOT AIC2262(FC) AIC2321/22 AIC2361/62	AIC2323 AIC2363 AIC2369	AIC2324(4A) AIC2364(4A) AIC2367(5A)

Mass Production!!

AIC2865

5A 16V 700kHz COT Synchronous Step-Down Converter

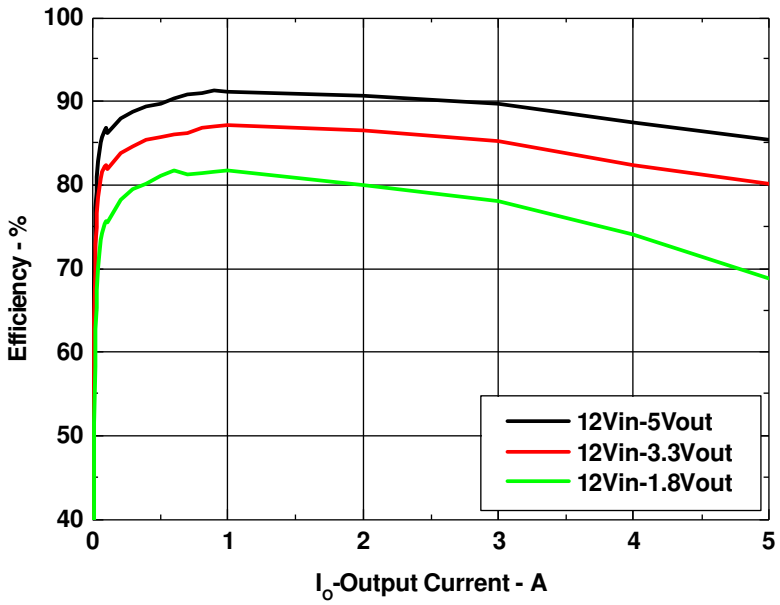

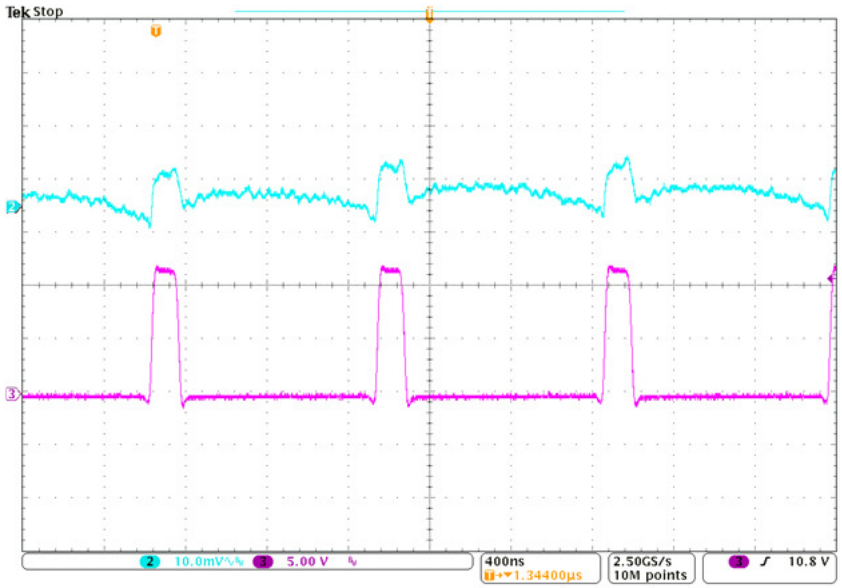

V_{OUT}=1.05V, I_{OUT}=5A Ripple at V_{IN}=12V

Application Circuit

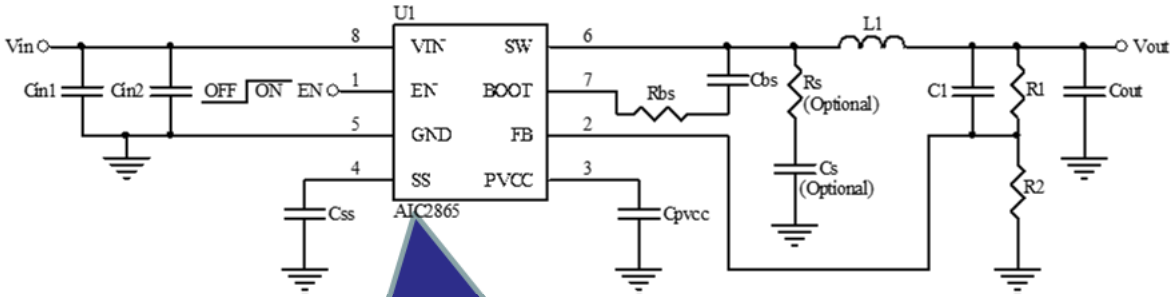

TPS54528 Compatible

Package

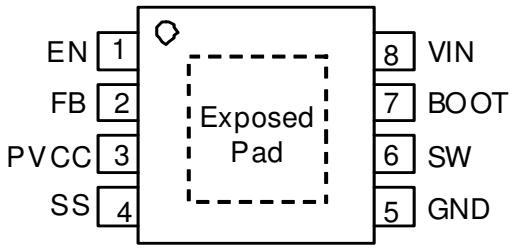

SOP-8 exposed pad

Mass Production!!

AIC2832

2A 16V 490kHz PWM/PSM Synchronous Step-Down Converter

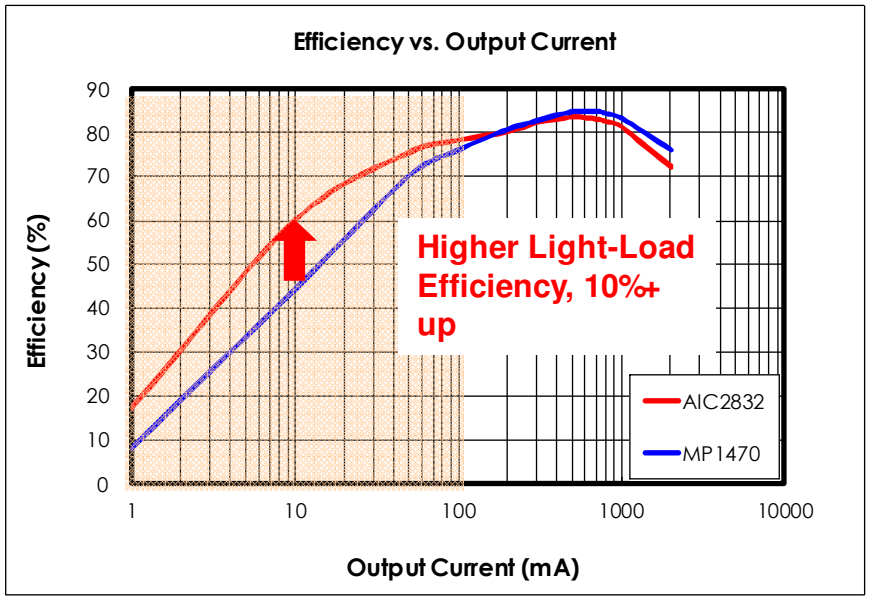

$1.05V_{OUT}$ Efficiency at V_{IN}=12V

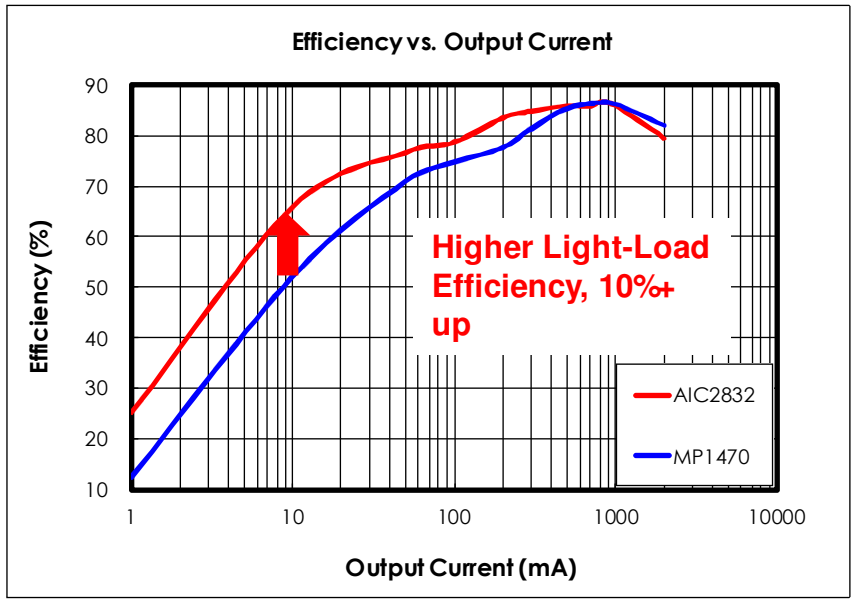

$1.8V_{OUT}$ Efficiency at V_{IN}=12V

Application Circuit

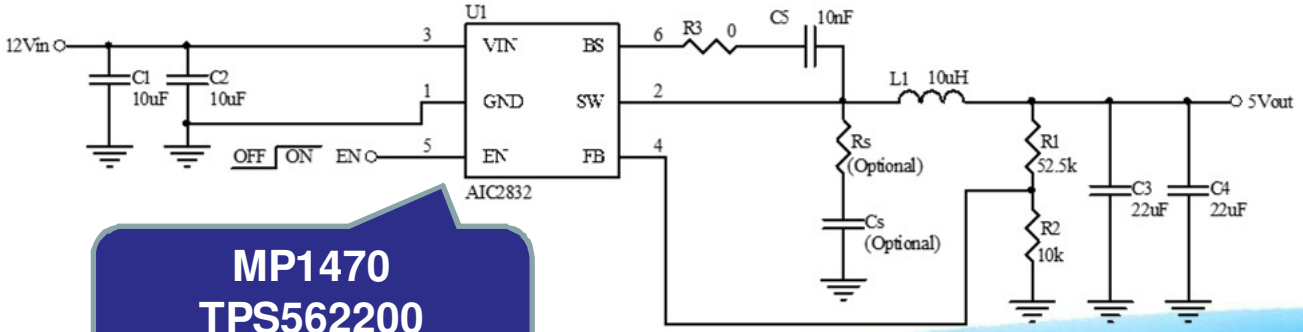

MP1470
TPS562200
Compatible

Package

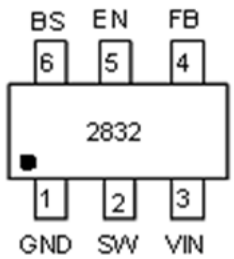

SOT-23-6

Mass Production!!

AIC2832

2A 16V 490kHz PWM/PSM Synchronous Step-Down Converter

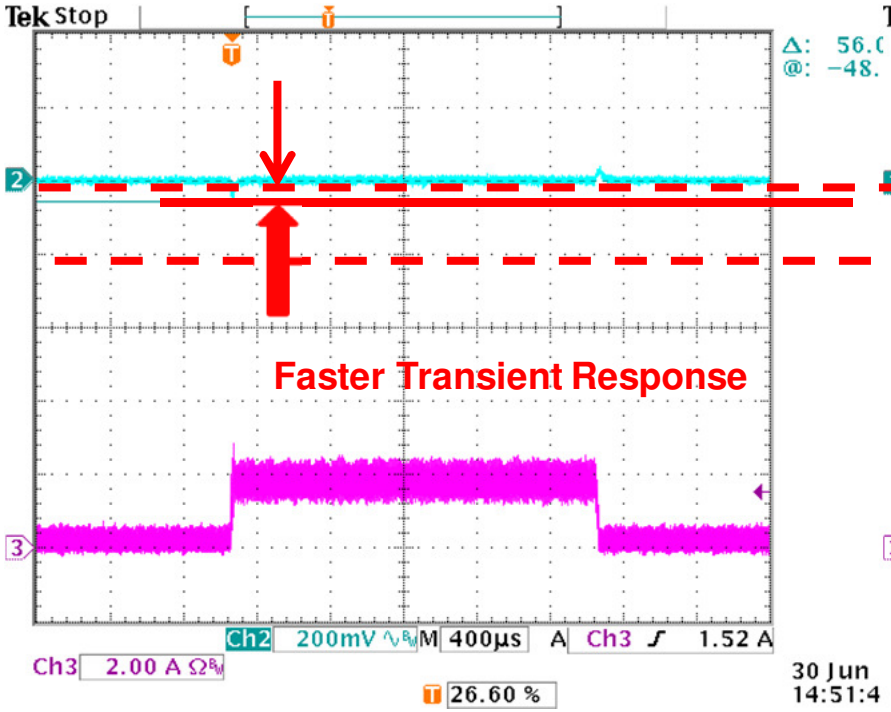

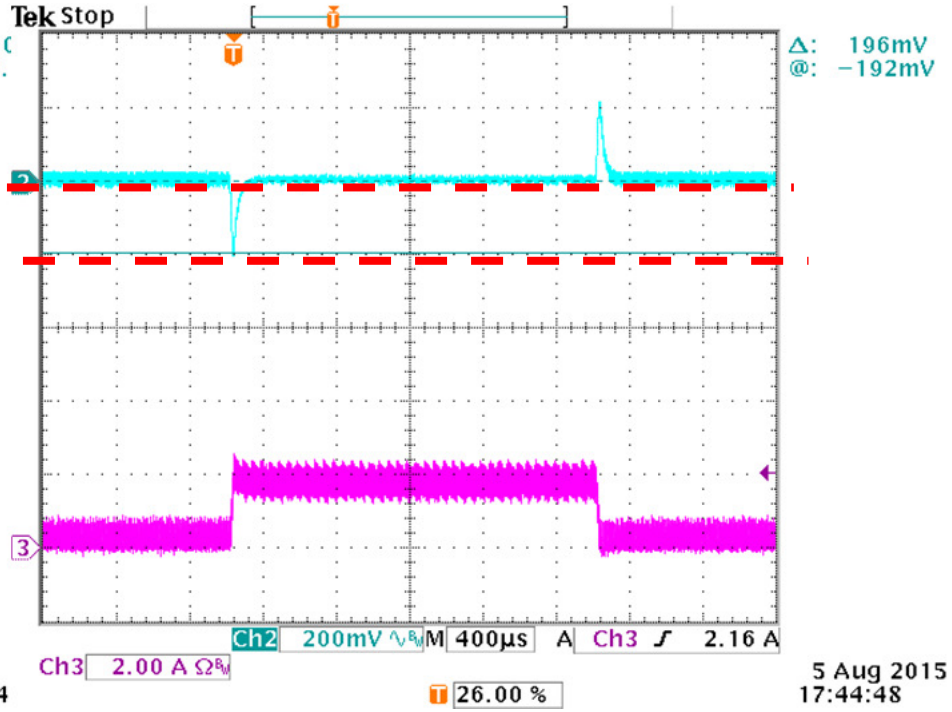

AIC2832 V_{IN}=12V, V_{OUT}=1.05V, I_O=0.2 ~ 1.8A, drop=59mV
CH2: Output Voltage, CH3: Inductor Current

MP1470 V_{IN}=12V, V_{OUT}=1.05V, I_O=0.2 ~ 1.8A, drop=196mV
CH2: Output Voltage, CH3: Inductor Current

Sampling in Apr.

AIC2833

3A 16V 490kHz PWM/PSM Synchronous Step-Down Converter

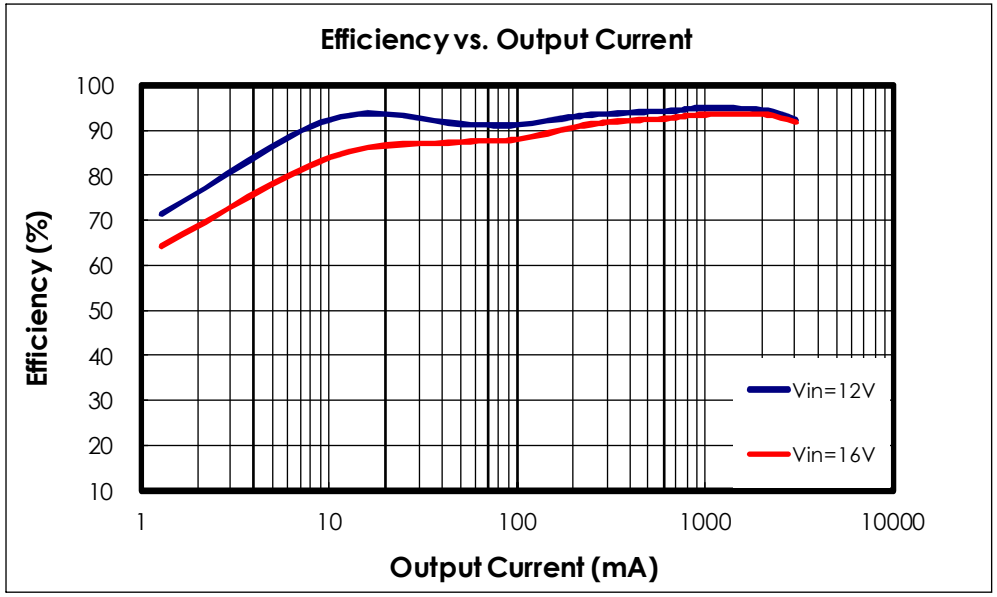

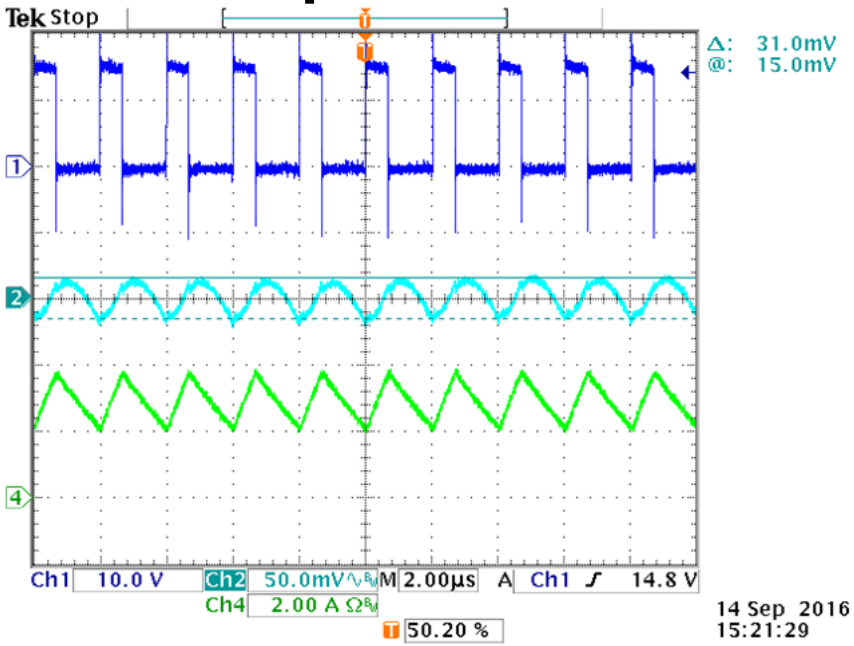

V_{OUT}=5V, I_{OUT}=3A Ripple at V_{IN}=12V

Application Circuit

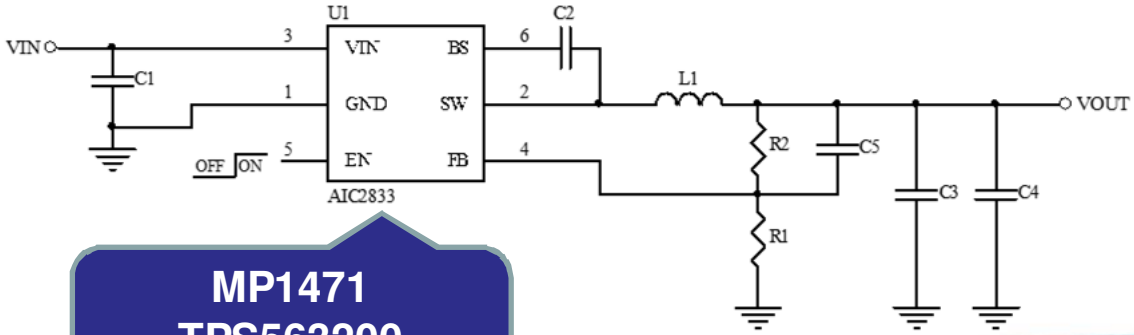

MP1471
TPS563200
Compatible

Package

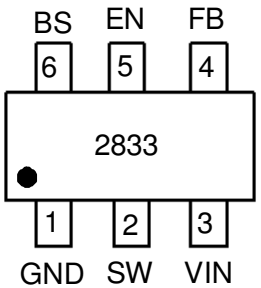

SOT-23-6

Sampling Now!!

AIC2259

1A, 1.5MHz AOT Synchronous Step-Down DC/DC Converter

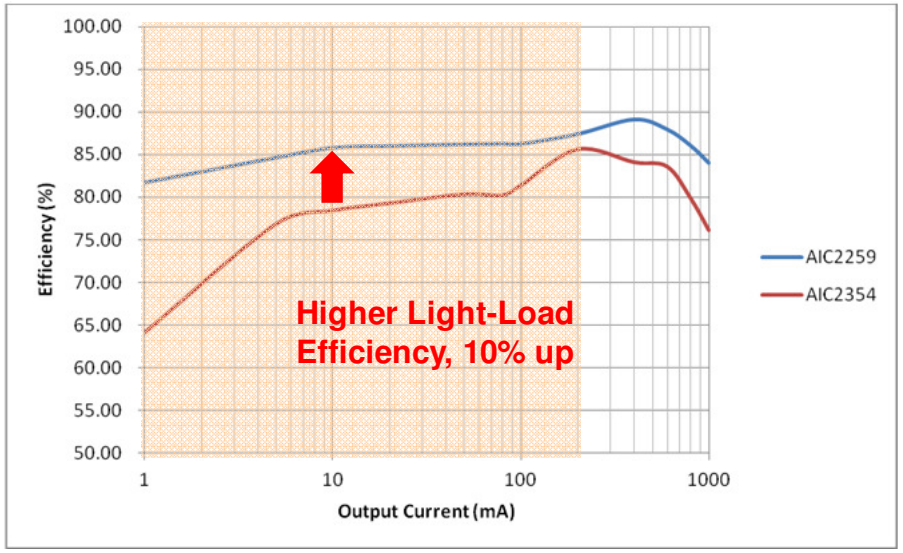

V_{OUT}=1.0V Efficiency at V_{IN}=5V

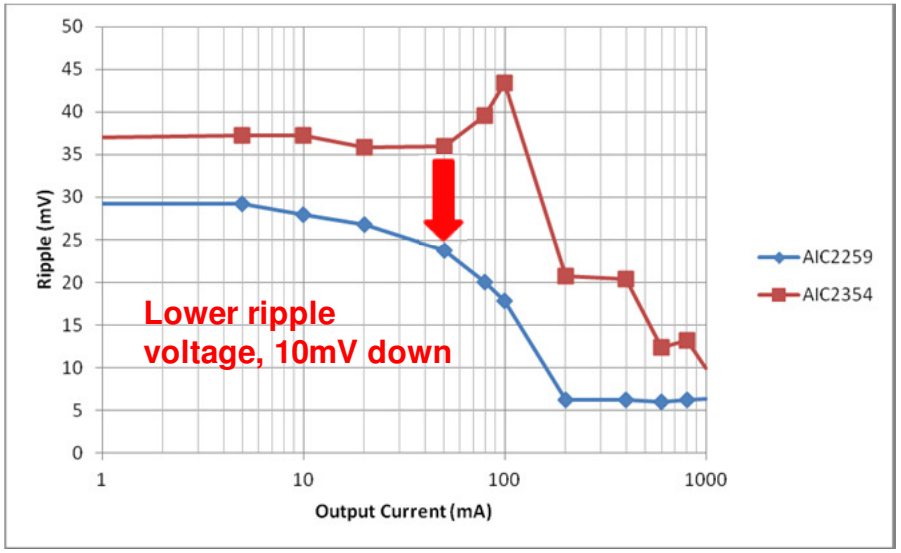

V_{OUT}=1.0V Ripple at V_{IN}=5V

Application Circuit

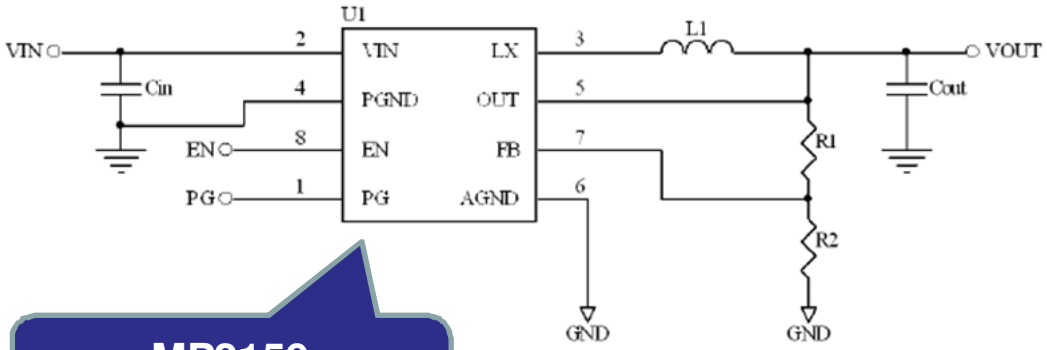

MP2159
Compatible

Package

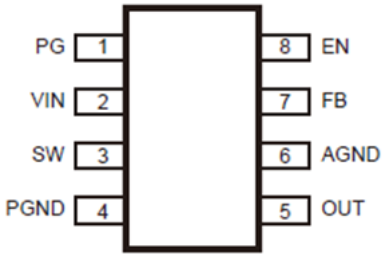

TSOT-23-8

Sampling Now!!

AIC2259

1A, 1.5MHz AOT Synchronous Step-Down DC/DC Converter

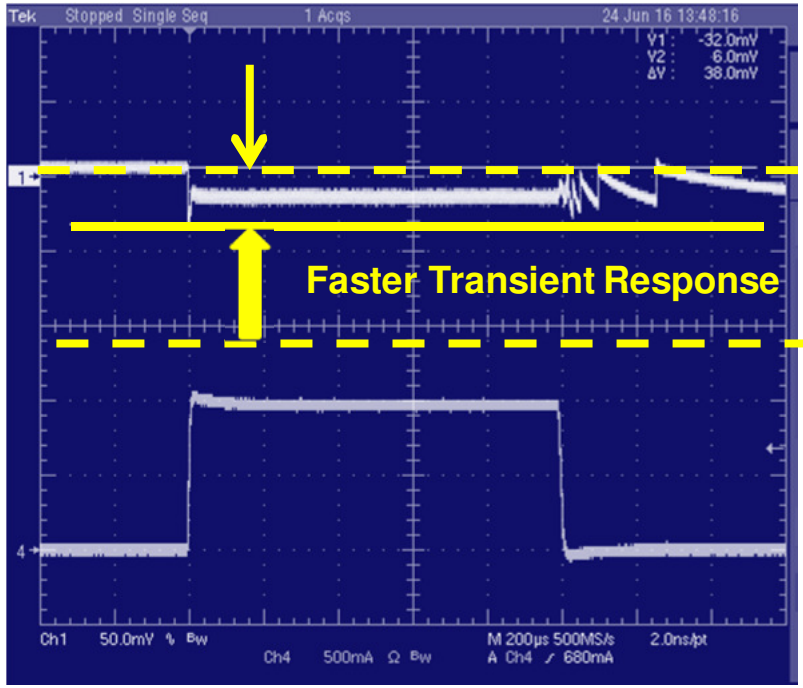

AIC2259 V_{IN}=5V, V_{OUT}=1.0V, I_O=0 ~ 1A,
drop=38mV
(CH1: Output Voltage, CH4: Output Current)

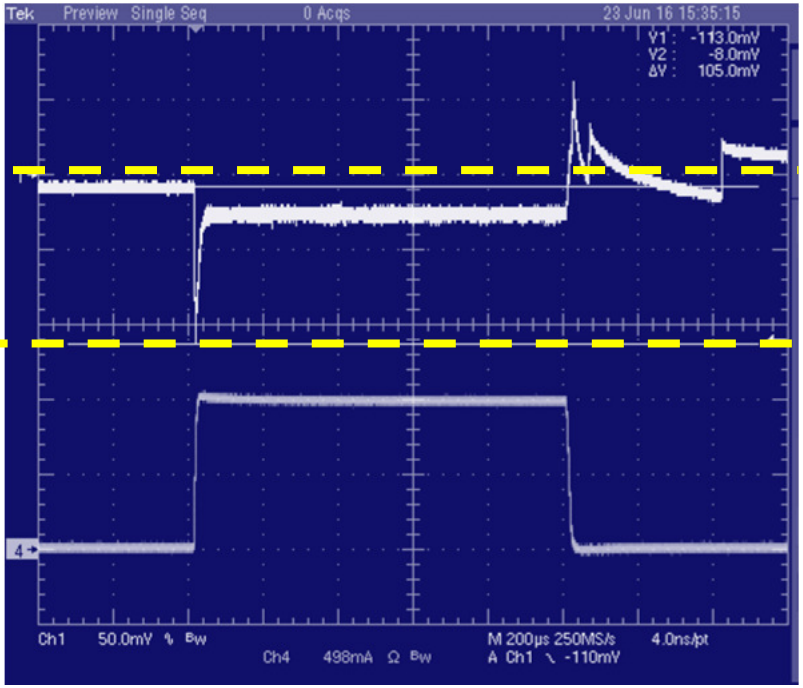

AIC2354 V_{IN}=5V, V_{OUT}=1.0V, I_O=0 ~ 1A,
drop=105mV
(CH1: Output Voltage, CH4: Output Current)

Sampling Now!!

AIC2262

2A 1.5MHz AOT Synchronous Step-Down Converter

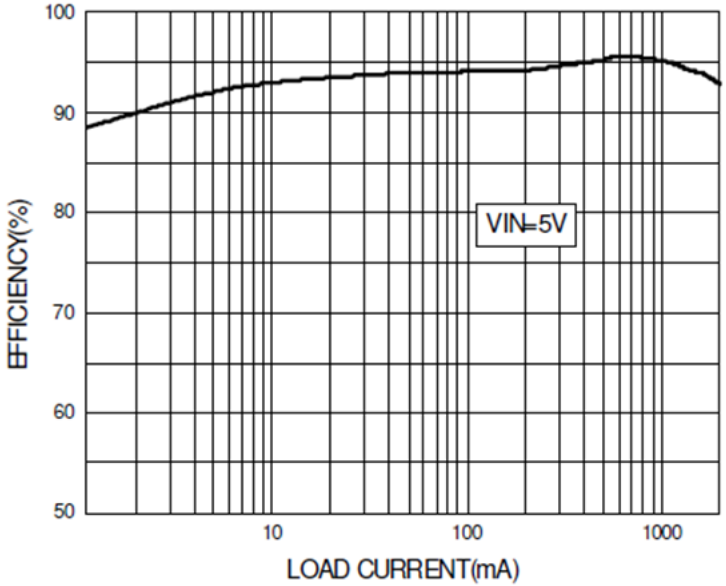

V_{OUT}=3.3V, V_{IN}=5V

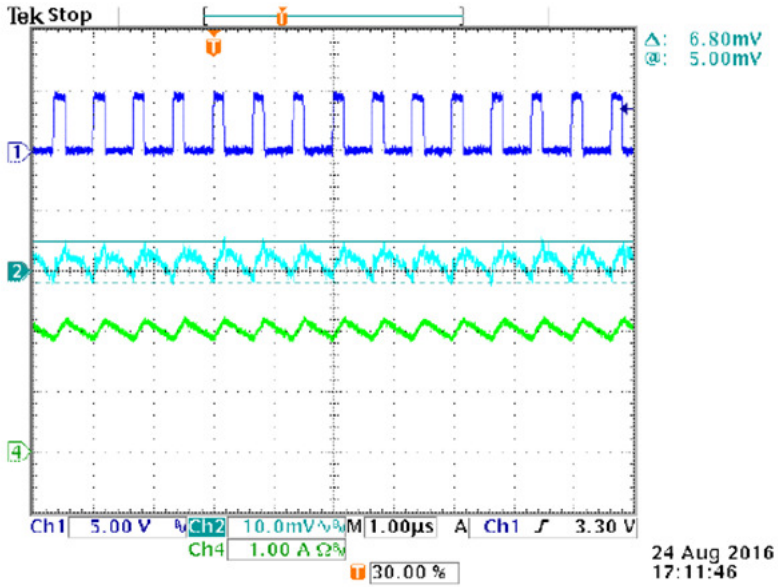

V_{OUT}=1.2V, I_{OUT}=2A Ripple at V_{IN}=5V

Application Circuit

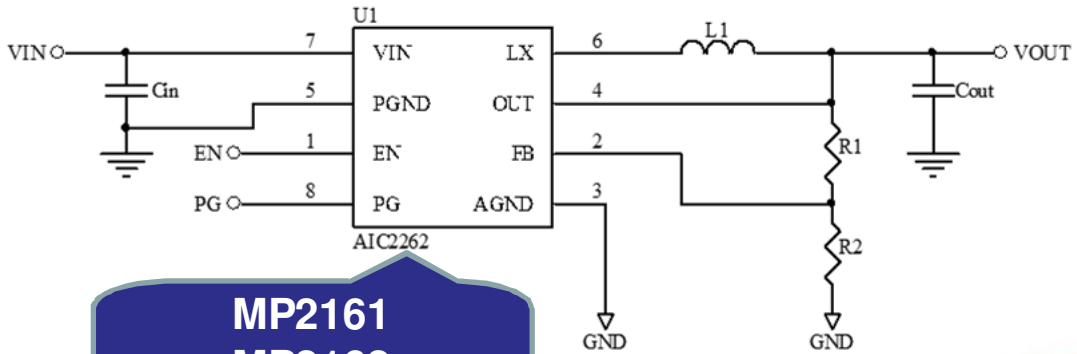

MP2161
MP2162
Compatible

Package

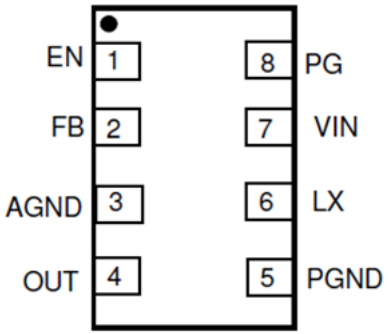

8-pin DFN 2mm x 1.5mm

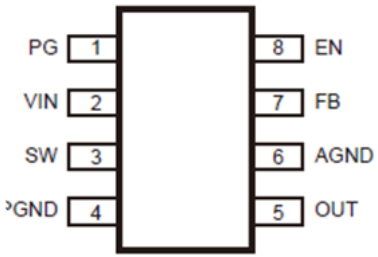

TSOT-23-8

Sampling Now!!

AIC2256

1A, 1.5MHz AOT Synchronous Step-Down DC/DC Converter

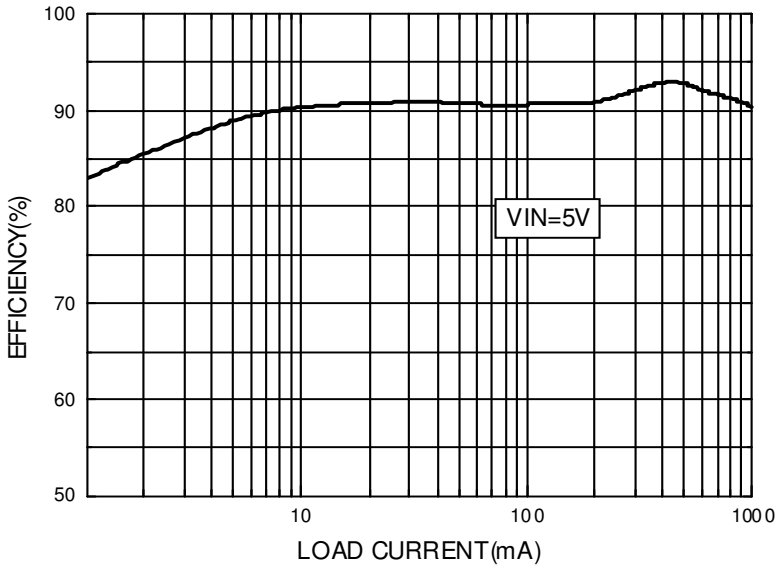

V_{OUT}=3.3V, V_{IN}=5V

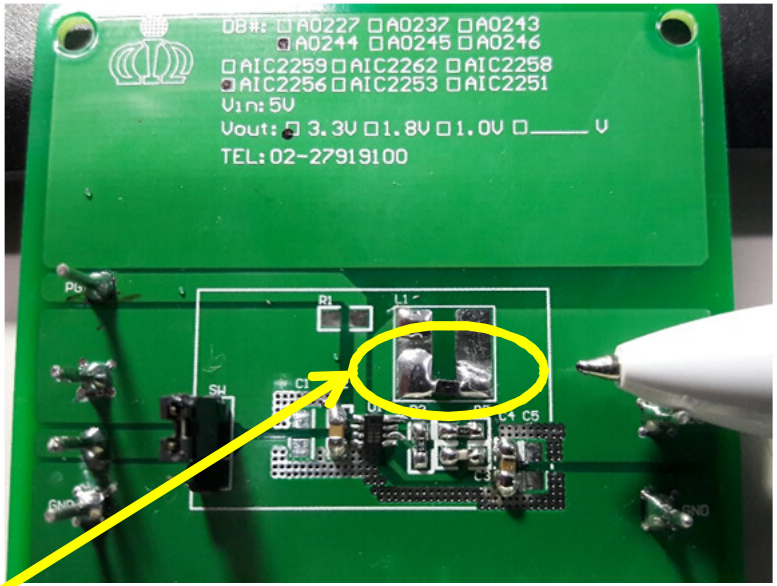

Application Circuit

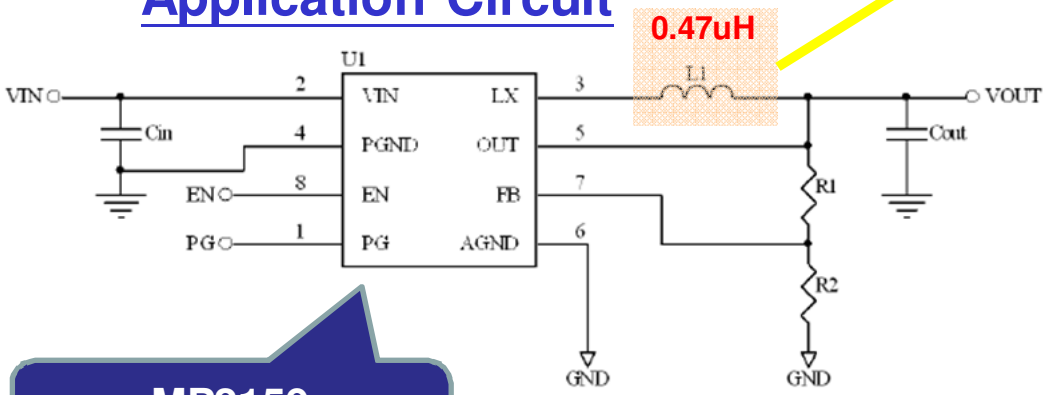

MP2159 Compatible

Package

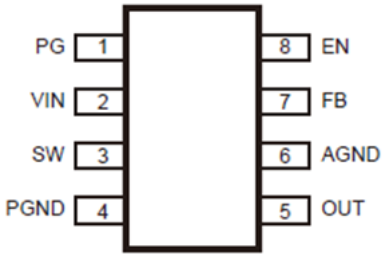

TSOT-23-8

AIC22xx Product Series

Part Number	AIC2385	AIC2253	AIC2256	AIC2258	AIC2259	AIC2262
Input Voltage	2.5V~6V	2.5V~6V	2.5V~6V	2.5V~6V	2.5V~6V	2.5V~6V
Output Current	1.5A	1A	1A	1A	1A	2A
Switching Frequency	1.5MHz	1.5MHz	**3MHz**	1.5MHz	1.5MHz	1.5MHz
Quiescent Current	65uA	**8uA**	17uA	17uA	17uA	17uA
Control Mode	Current Mode PWM	AOT	AOT	AOT	AOT	AOT
Package	Wire-bond SOT23-5	Wire-bond TSOT23-8	Wire-bond TSOT23-8	**Flip-chip** TSOT23-8	Wire-bond TSOT23-8	**Flip-chip** TSOT23-8 DFN8
Remark	P2P TLV62565	P2P MP2158 MP2159	P2P MP2158 MP2159	P2P MP2158 MP2159	P2P MP2158 MP2159	P2P MP2161 MP2162

Sampling in May. 2017

AIC2873

3A 17V Synchronous Step-Down Converter with AOT Control

- AOT Topology
- Input Voltage Range: 3 V to 17 V
- Up to 3A Output Current
- Adjustable Output Voltage From 0.9 V to 5 V
- Pin-Selectable Output Voltage (Nominal, + 5%)
- Programmable Soft Start and Tracking
- Seamless Power Save Mode Transition
- **Quiescent Current of 19 μA (Typical)**
- Selectable Operating Frequency
- Power Good Output
- **100% Duty Cycle Mode**
- Short-Circuit Protection
- **Over-Voltage Protection with Latch**
- Over Temperature Protection
- Available in a 3-mm × 3-mm, VQFN-16 Package

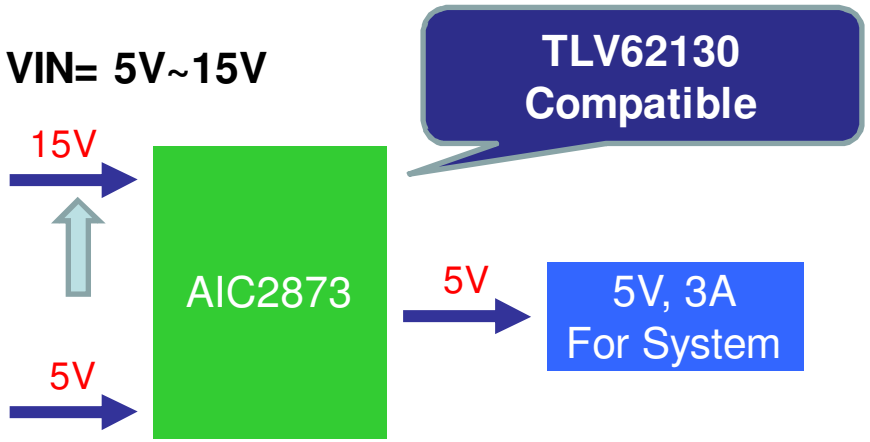

Capable for 100% Duty Cycle Operation

Application Circuit

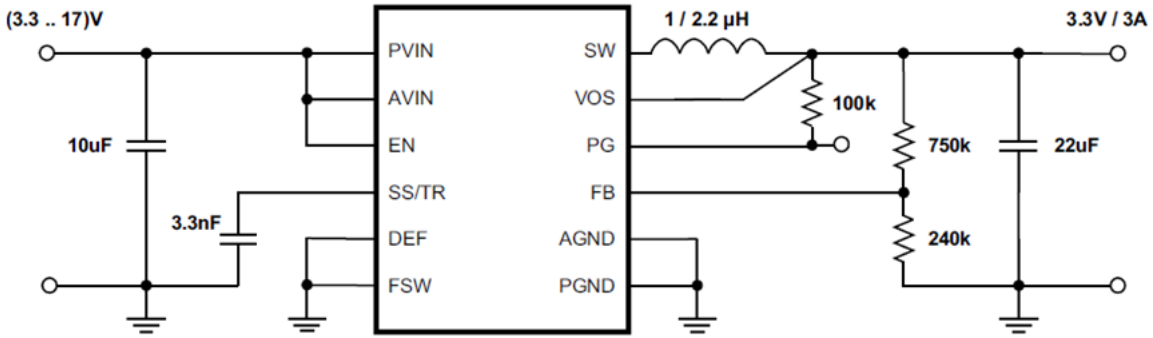

Package

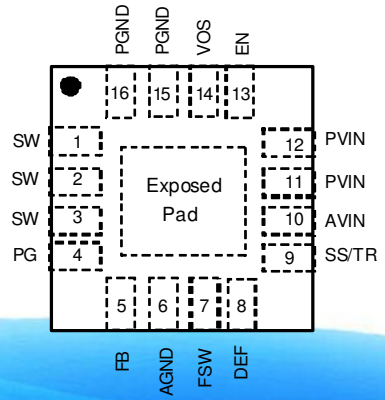

16-pin VQFN 3mm × 3mm

Sampling in Jun. 2017

AIC2893

3A 36V 650kHz Synchronous Step-Down Converter

- 3A Continuous Output Current
- Wide 4.5V to 36V Operating Input Range
- Output Adjustable from 0.8V to 6V
- Up to 91% efficiency
- Low Rds(on) Internal Switch
- Adaptive On Time Control
- Fast Transient Response
- 650kHz Switching Frequency
- Programmable Soft Start
- Thermal Shutdown
- Cycle by Cycle Over Current Protection
- Short Circuit Protection
- Thermal Shutdown
- Available in SOP-8 exposed pad (Heat Sink) package

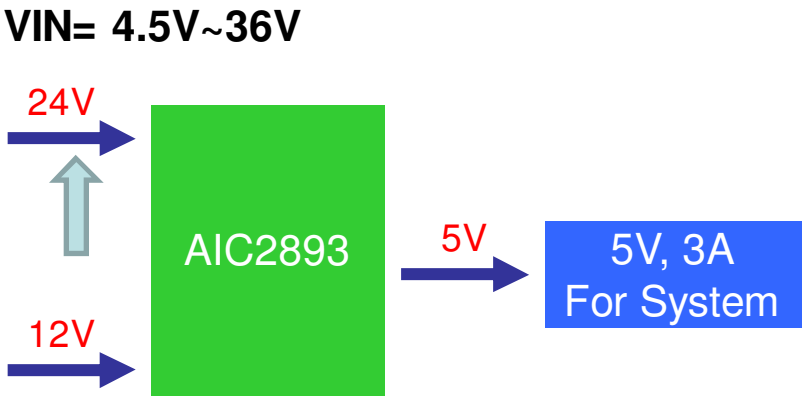

Application Circuit

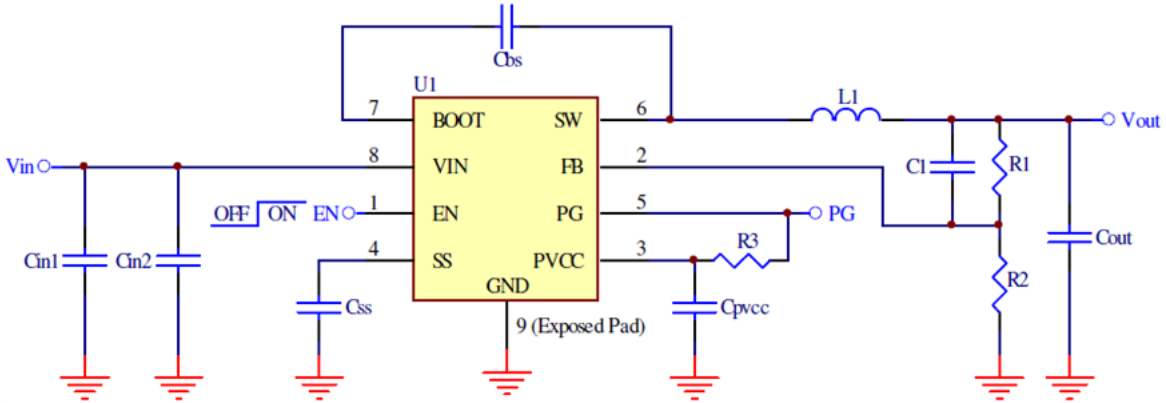

Package

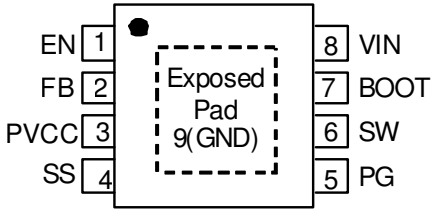

SOP-8 exposed pad

Sampling in Jun.

AIC2140

300mA Ultra Low Iq Step-Down Converter with AOT Control

- Typ. 360nA Quiescent Current
- Adaptive On Time Control
- 2.2V to 5.5V Input Range
- Up to 90% Efficiency at 10µA Output Current
- 16 Selectable Output Voltages in 100mV Steps between 1.8V to 3.3V
- Up to 300mA Output Current
- Automatic Transition to No Ripple 100% Mode
- Low Output Ripple Voltage
- Slew Rate Controlled Load Switch
- Discharge Function on VOUT / LOAD
- Power Good Output
- Up to 2 MHz Switching Frequency
- Optimized for Operation with a Tiny 2.2µH Inductor and 10µF C_{OUT}
- Small 2.4 x 2.4 mm² DFN-12 Package

VIN= 4.5V~16V

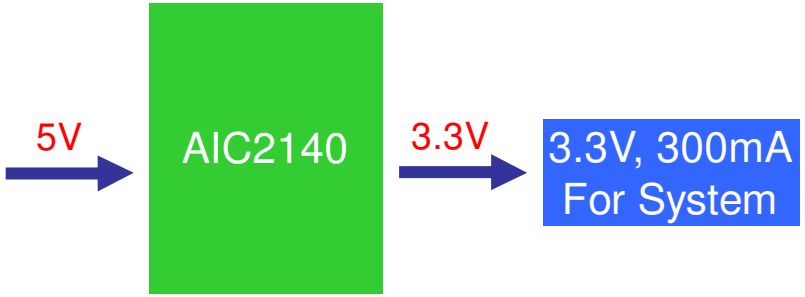

Application Circuit

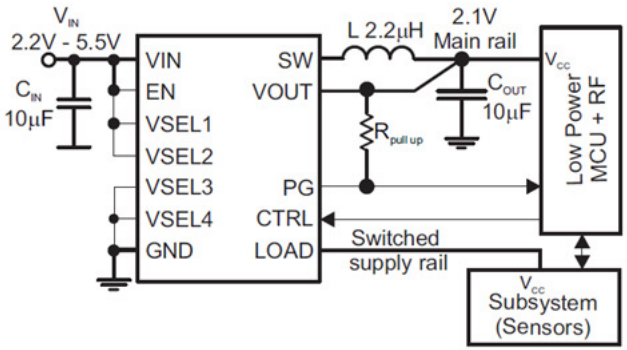

Package

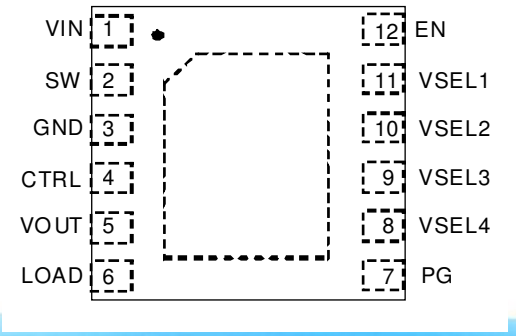

12-pin DFN 2.4mm x 2.4mm

Boost Converters

AIC16xx/34xx/36xx Series

Switch Current Limit		≤1A	≤2A	≤3A	≤5A
Boost	Vout up to 40V		AIC3646		
	Vout up to 30V	AIC1634 AIC1647 AIC1896			
	Vout up to 22V	AIC3643			
	Vout up to 5.5V	**AIC3402** Low Iq 3uA **AIC3411/12** AIC3413 AIC3634 **AIC3643**	AIC3415	AIC3417	AIC3418 **AIC3420(6.5A)**
Buck-Boost	Vin up to 5.5V	**AIC2341** **AIC2341A** **AIC2340**	**AIC2342**	**AIC2343**	

Mass Production!!

AIC3402

Synchronous Step-Up DC/DC Converter

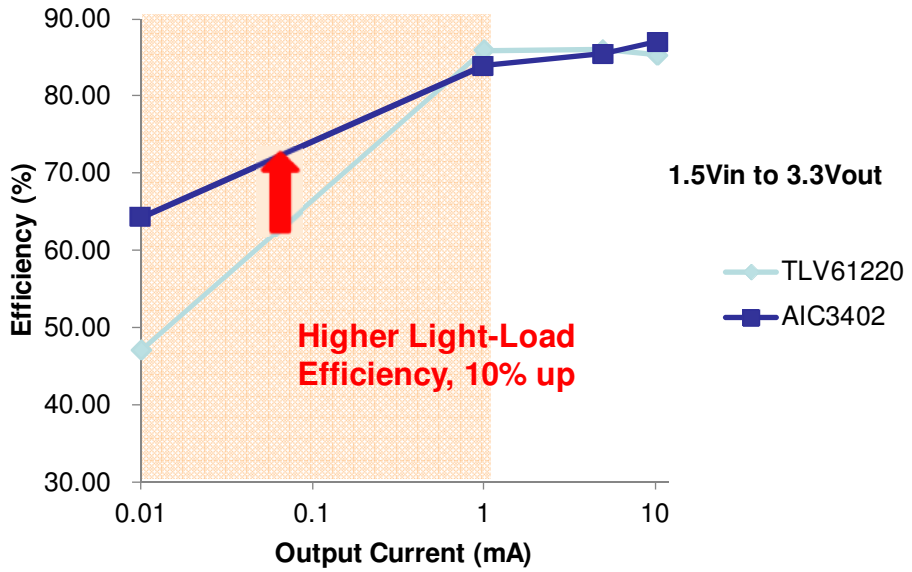

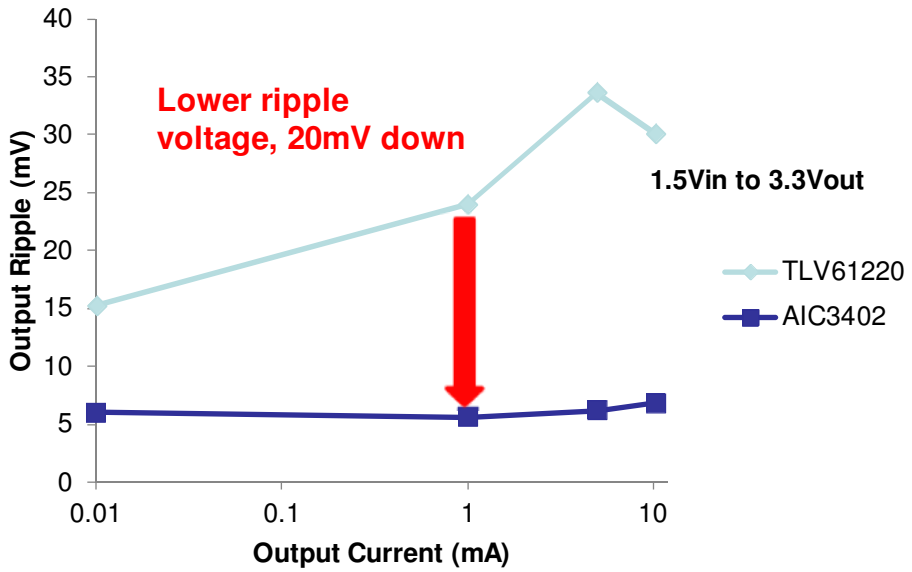

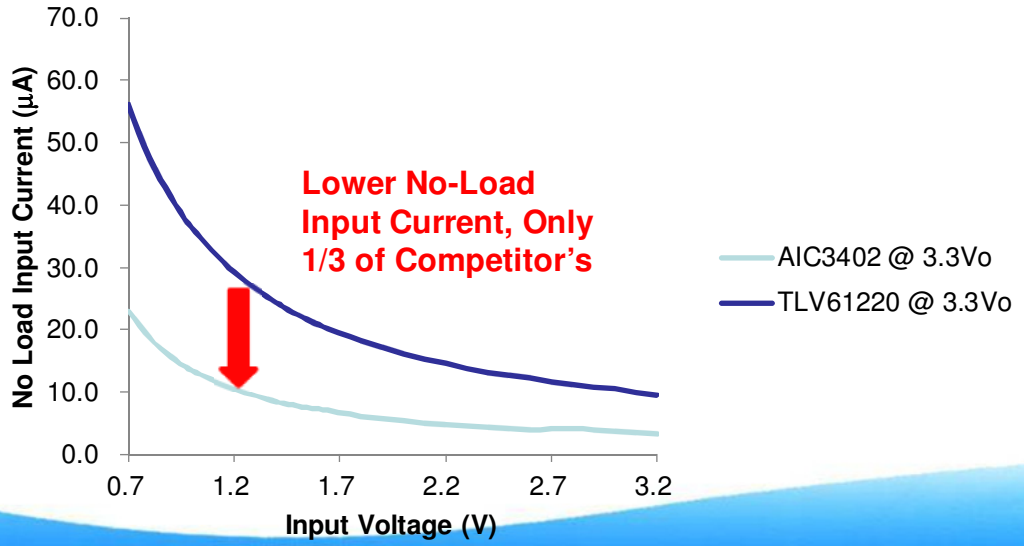

Application Circuit

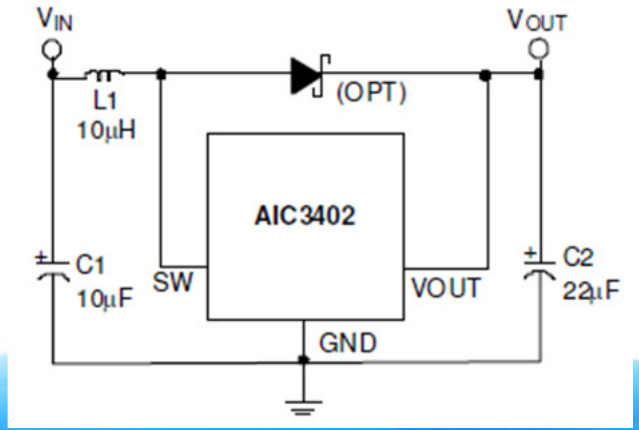

Mass Production!!

AIC3411

SC-70 Package Low IQ High Light Load Efficiency Synchronous Boost Converter

- Deliver 3.3V at 60mA from a Single Alka-line/Ni-MH or 3.3V at 120mA from Two Cells
- Up to 94% Efficiency
- Low Shutdown Current: <1.0μA
- Low Quiescent Current: 7.5μA.
- Low No-load Input Current (see Typical Perfor-mance Characteristics for detail)
- Start up Into Load at 0.7V Input Voltage
- **Output Disconnect** by Shutdown Function
- Anti-ringing Control for EMI Consideration
- Small SC70-6 Package

Application Circuit

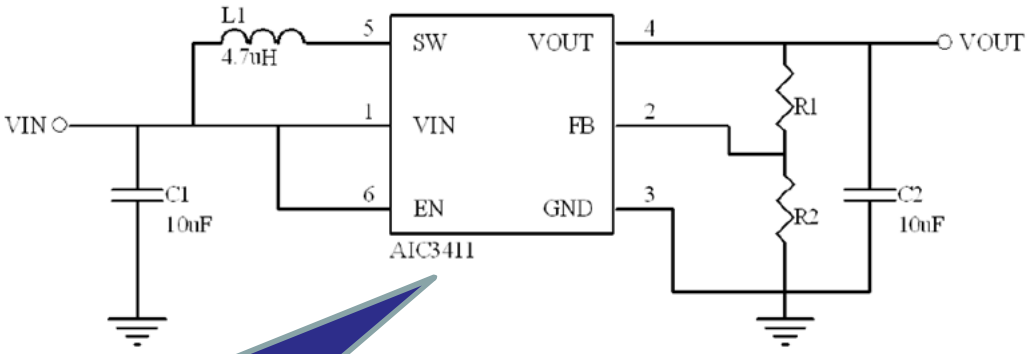

TPS61220 Compatible

Package

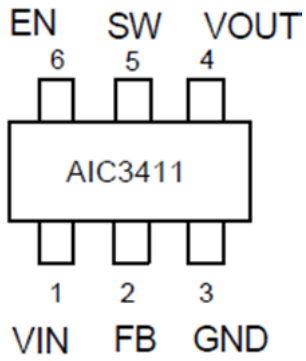

SC70-6

AIC3411

SC-70 Package Low IQ High Light Load Efficiency Synchronous Boost Converter

	AIC3411	TPS61220
Start up voltage	0.7V	0.7V
Vout range	1.65V~5.5V	1.8~5.5V
Quiescent current	7.5µA	5µA
Current limit	0.4A	0.4A
Control mode	Sync Constant Off Time/PSM	Sync Hysteretic Current Control
Max Efficiency	93%	95%
Package	SC-70	SC-70
True shut down	**Yes**	No
Diode required	No	No
Cin/Cout	10uF/10uF	10uF/10uF

Mass Production!!

AIC3412

Low IQ High Light Load Efficiency Synchronous Boost Converter

- Deliver 3.3V at 60mA from a Single Alka-line/Ni-MH or 3.3V at 120mA from Two Cells
- Up to 94% Efficiency
- Low Shutdown Current: < 1μA
- Low Quiescent Current: 12μA.
- Low No-load Input Current (see Typical Perfor-mance Characteristics for detail)
- Output Disconnect by Shutdown Function
- Small SOT23-6 Package

Application Circuit

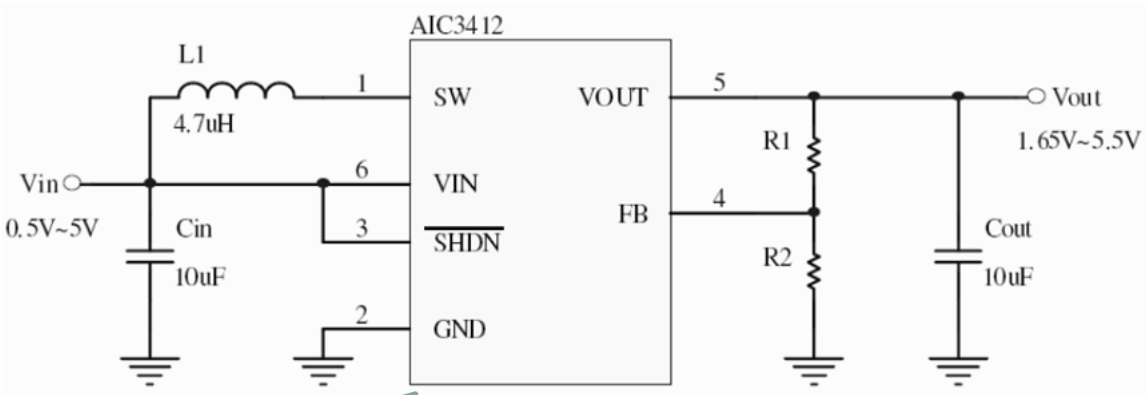

TPS61070 Compatible

Package

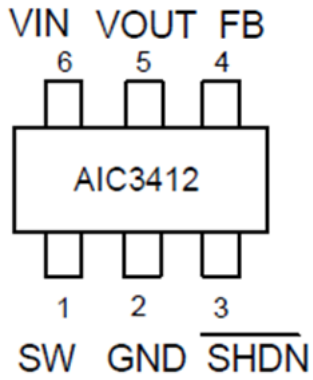

SOT23-6

Mass Production!!

AIC3420

2.1A Synchronous Step-Up Converter

- Vin Start Up Voltage: 0.9V
- Output Voltage Range: from 2.5V to 5.5V.
- Up to 94% Efficiency
- Up to 2.1A Continuous Output Current
- Allow EN pin Floating
- Built-in current mode compensation
- Built-in Protection: Over Current, Over Voltage, Over Temperature
- Optional Active High/Low EN pin
- Logic Controlled Shutdown: < 1μA
- Output Disconnect by Shutdown Function
- Built-in Soft Start

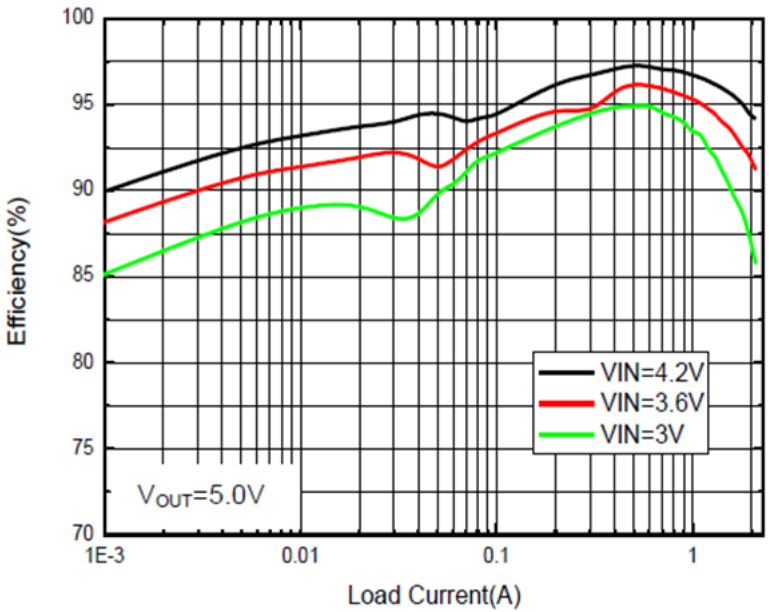

Application Circuit

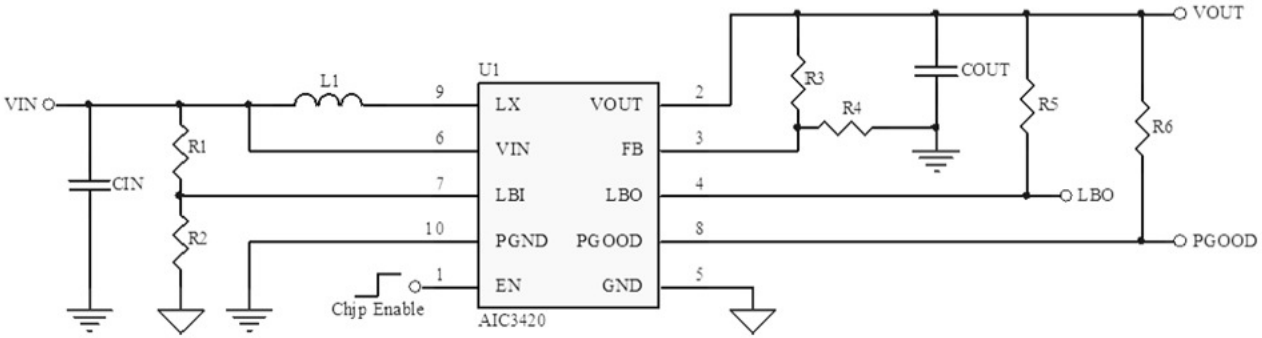

Package

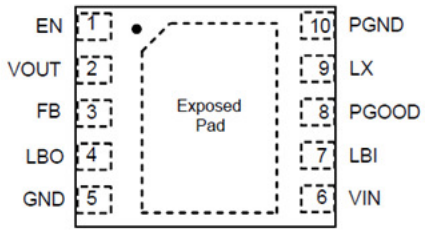

DFN-10

Mass Production!!

AIC3643

Built-in OVP White LED Step-Up Converter

- Built-In Open Circuit Protection
- Over Voltage Protection
- Efficiency Up to 83% at VIN=4.2V, 3LEDs, ILED=20mA
- 1.2MHz Fixed Switching Frequency
- Drives Up to 5LEDs in series
- 2.5V to 5.5V Input Voltage
- Low Supply Current: 150μA
- Matches LED Current
- Requires Tiny Inductor and Capacitors
- TSOT-23-6, and SOT-23-6 Packages

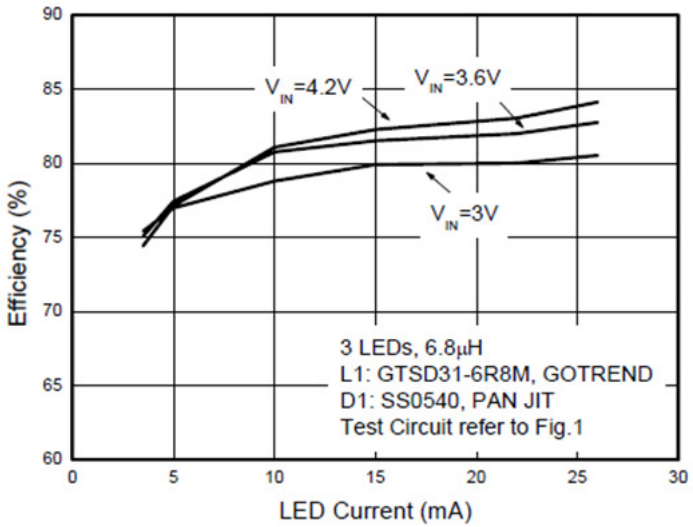

Application Circuit

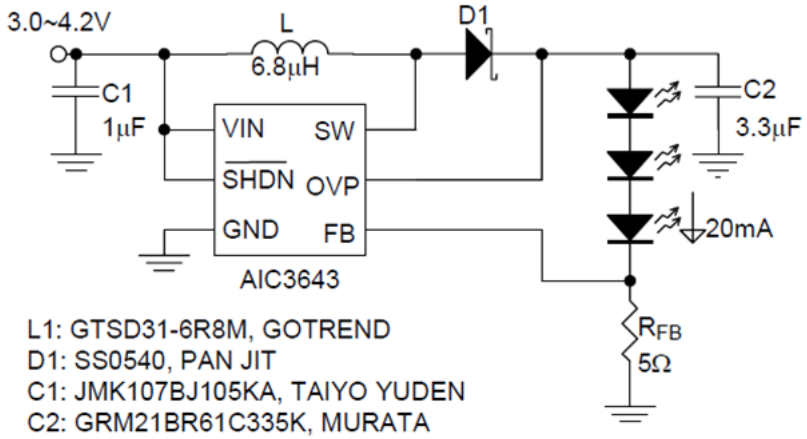

Package

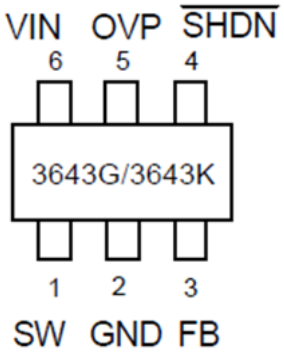

SOT23-6

Mass Production!!

AIC2341

1A 2.5MHz Synchronous Buck-Boost DC/DC Converter

- Regulated Output with Input Voltage Above, Below, or Equal to The Output
- 1A Output Current at 3.3V in Step-Down Mode
- Up to 800mA Output Current at 3.3V in Boost Mode
- Single Inductor
- 2.5V to 5.5V Input Voltage Range
- Fixed and Adjustable Output Voltage Options from 1.8V to 5.5V
- Up to 95% Efficiency
- Stable with Low ESR Ceramic Capacitors
- No Schottky Diode Required
- Output Disconnect in Shutdown
- <1uA Shutdown Current
- <65uA Quiescent Current
- Power Saving Mode for Improved Light-Efficiency Operation
- Forced Fixed Frequency Operation Mode
- Load Disconnect During Shutdown
- Undervoltage Lockout Protection

TPS63000
MP2155
RT6150A
Compatible

VIN= 2.5V~5.5V

2.7V~4.2V → AIC2341 → 3.3V → 3.3V, 1A For System

Application Circuit

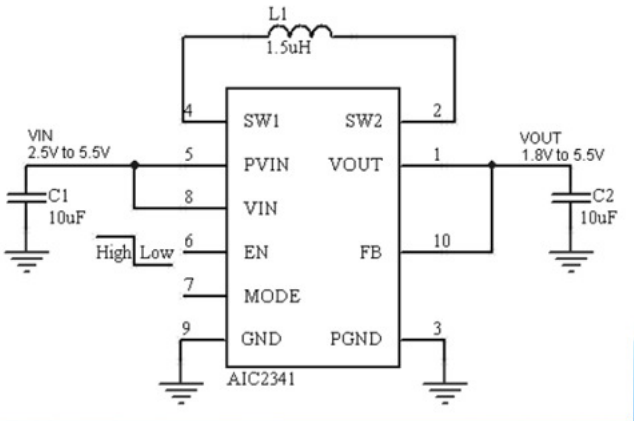

Package

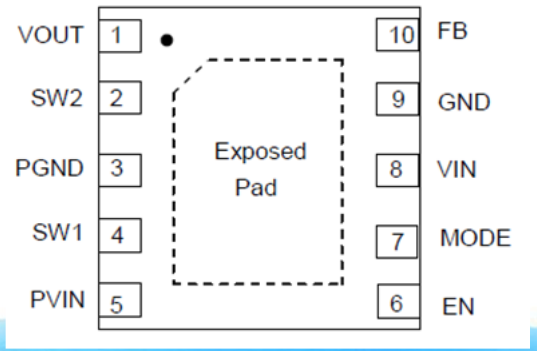

10-pin DFN 3mm × 3mm

AIC2341

1A 2.5MHz Synchronous Buck-Boost DC/DC Converter

	AIC2341	TPS63000	MP2155	RT6150A
Input Voltage	2.5V~5.5V	**1.8V**~5.5V	2V~5.5V	1.8V~5.5V
Vout range	1.8V~5.5V	**1.2V**~5.5V	1.5V~5V	1.8V~5.5V
Quiescent current	50μA	**40μA**	80μA	60μA
Switching Frequency	**2.5MHz**	1.5MHz	1MHz	1MHz
Output Current	1A@Buck 0.8A@Boost	**1.2A**@Buck 0.8A@Boost	1A@Buck **1A**@Boost	0.8A@Buck 0.8A@Boost
Current Limit	1.8A	1.8A	2.2A	1.6A
Package	DFN10	QFN10	QFN10	QFN10
Cin/Cout	10uF/10uF	10uF/10uF	10uF/22uF	10uF/20uF
Inductor	**1.5uH**	2.2uH	3.3uH	2.2uH

Power Switch

AIC61xx Series

Current Limit		Single Channel	Dual Channel
USB Power Switch	≤1A	AIC6161 AIC6151	AIC6186
	≤2A	AIC6162(1.4A) AIC6163 AIC6170 AIC6152	AIC6176(1.25A) AIC6178 AIC6188(1.55A)
	≤3A	AIC6156 AIC6164(3.2A)	
Regulatory USB Power Switch	≤1A	AIC6166 AIC6168	
Bare-Bone Power Switch	≤1A	AIC6191	AIC6196
	≤2A	AIC6193	AIC6198

Fast SCP 1.3uS,
±7~15% Curr. Accuracy

Sampling Now!!

AIC6156

Single Channel USB Switch with Adjustable Current Limit

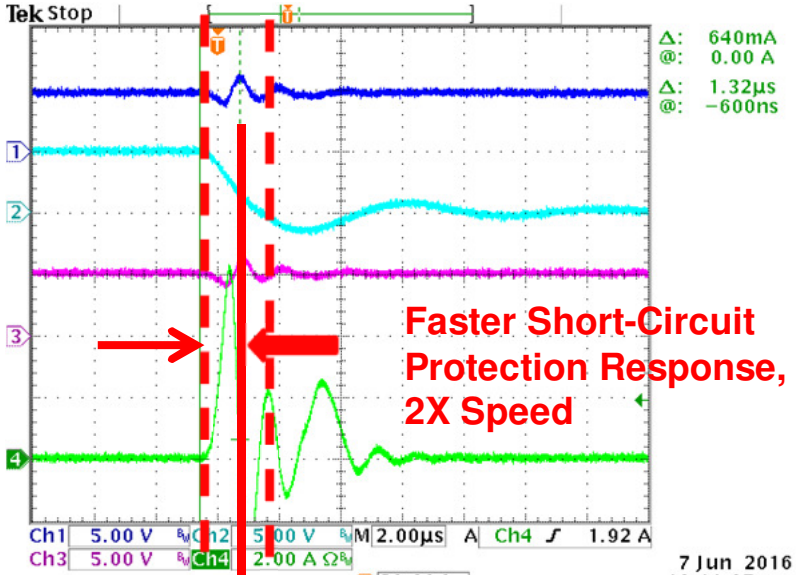

AIC6156 V_{IN}=5V, I_{CL}=0.5A, **Res. Time=1.32uS**
(CH1: Input Voltage, CH2: Output Voltage, CH3: FLG, CH4: Input Current)

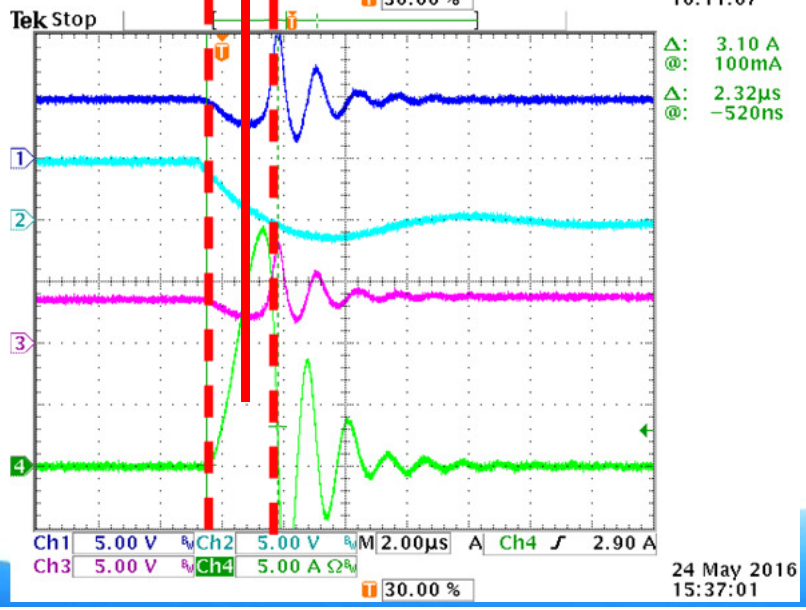

TPS2554 V_{IN}=5V, I_{CL}=0.5A, **Res. Time=2.32uS**
(CH1: Input Voltage, CH2: Output Voltage, CH3: FLG, CH4: Input Current)

Application Circuit

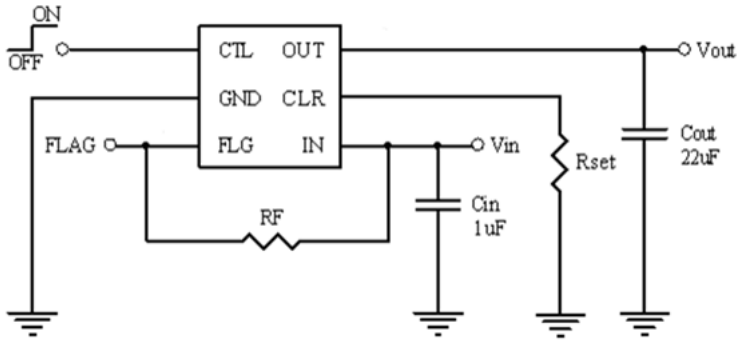

Package

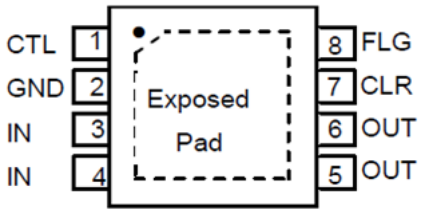

SOP-8 EP

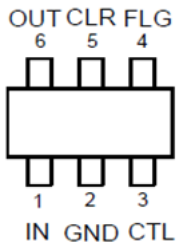

SOT-23-6

USB Power Switch at 3A

	AIC	TI	Rohm	On-Semi
Part Number	**AIC6156**	**TPS2554 TPS2555**	**BD82024 BD82025**	**NCP383**
Short Circuit Response Time(uS)	**1.3**	1.5	5	2
Continuous Load Current (A)	0.5~3 (Adj.)	0.5~2.5 (Adj.)	2.5 (Adj.)	0.5~2.1 (Adj.)
MOS R-DS-ON (mohm)	**60**	73	90	45
Supply current (µA)	85	90	95	**99**
Input Voltage Range (V)	3.5~5.5	4.5~5.5	2.8~5.5	2.7~5.5
Current Limit Threshold (mA)	3060/ 3600/ 4140 1700/ 2000/ 2300 425/ 500/ 575	2550/ 2840 / 3100 2150/ 2430/ 2650 420/ 480/ 530 185/ 230/ 265	2100/2500/3300	2580/2800/3010 900/1000/1100 500/600/700
Current Limit Accuracy (%)	±15	±12	±15	±8
High Side Switch	NMOS	NMOS	NMOS	NMOS
Flag Delay Time (mS)	9	8.5	12	7
Output discharge	**Yes**	Yes	Yes	No
Package	SOP-8/SOT23-6	VSON	SOP8	UDFN10

USB Power Switch at 2A

	AIC	TI	Rohm	On-Semi
Part Number	**AIC6152**	**TPS2553**	**BD2222G BD2242G BD2243G**	**NCP380 NCV380**
Short Circuit Response Time(uS)	**1.3**	2	5	2
Continuous Load Current (A)	0.5~2 (Adj.)	0.75~1.7 (Adj.)	0.2~1.7 (Adj.)	0.5~2.1 (Adj.)
MOS R-DS-ON (mohm)	**60**	85	89	70
Supply current (µA)	**85**	100	120	90
Input Voltage Range (V)	3.5~5.5	2.5~6.5	2.8~5.5	2.5~5.5
Current Limit Threshold (mA)	1700/ 2000/ 2300 425/ 500/ 575	1610/ 1700 / 1800 1215/ 1295/ 1375 490/ 520/ 550 100/ 130/ 150	1566/1696/1826 911/1028/1145 112/212/313	2100/2250/2500 1000/1150/1300 500/580/650
Current Limit Accuracy (%)	±15	±6	±8	±12
High Side Switch	NMOS	NMOS	NMOS	PMOS
Flag Delay Time (mS)	9	8	7	8
Output discharge	**Yes**	No	BD2242/43	No
Package	SOT23-6	SOT23-6	SSOP6	TSOP-6

Stepper Motor Driver

AIC88xx Series

Output Current		≤700mA	≤1.5A	≤2.5A
Surveillance	Vin up to 45V		AIC8863	
MFP	Vin up to 38V		AIC8853	AIC8855
POS & Toy	Vin up to 10V	AIC8833	AIC8835	

Sampling in Q4 2017

AIC8833

15V, 700mA, Stepper Motor Driver with Integrated MOSFETs

- Wide 2.7V to 15V Input Voltage Range
- Two Internal Full-Bridge Drivers
- Low MOSFET On Resistance (HS: 500mohm; LS: 500mohm)
- Internal Charge Pump for the High-Side Driver
- Low Quiescent Current: 1.1mA
- Low Sleep Current: 1uA
- Thermal Shutdown and Under-Voltage Lockout Protection
- Over-Temperature Output Flag
- Thermally-Enhanced Surface-Mount Package

Application Circuit

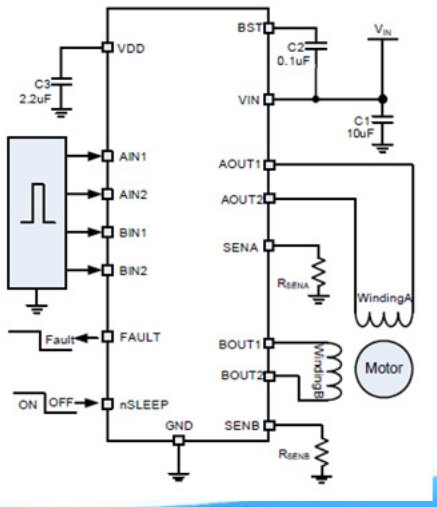

Package

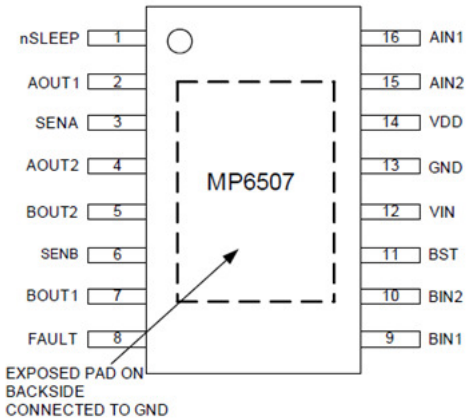

16pin TSSOP16-EP

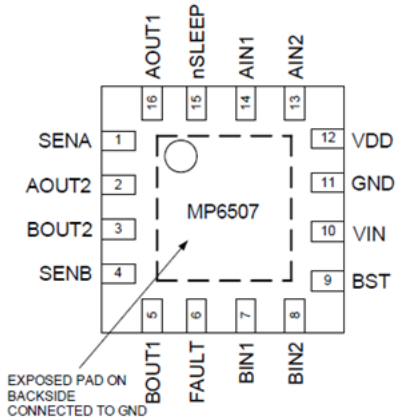

16pin QFN 3mm x 3mm

AIC8833

15V, 700mA, Stepper Motor Driver with Integrated MOSFETs

	AIC	Ti	MPS
Part Number	**AIC8833**	**DRV8833C**	**MP6507**
Output Current (mA)	700	**700**	700
MOS R-DS-ON (mohm)	1180/555	1180/555 Iout=200mA	**460/395** **Iout=500mA**
Quiescent current (A)	1.7mA	1.7mA	**1.1m**
Sleep Mode Current (A)	1.6uA	1.6uA	**1uA**
Input Voltage Range (V)	2.7~10.8	2.7~10.8	**2.7~15**
Package	TSSOP16-EP QFN16 3X3	HTSSOP16 QFN16 3X3	TSSOP16-EP QFN16 3X3 QFN16 4X4

ULDO Linear Regulators

AIC11xx/12xx/17xx Series

Output Current		≤150mA	≤300mA	≤600mA	≤1A	≤2A
Single Channel	Vin up to 12V	AIC1730	AIC1731 AIC1734	AIC1733 AIC1735		
	Vin up to 9V	Low Noise 25uVrms AIC1742				
	Vin up to 7V	Ultra Low Iq 3uA AIC1701 AIC1746	AIC1702 AIC1747	AIC1748	AIC1190	AIC1221
		PSRR 65dB@1kHz				
Dual Channel	Vin up to 7V		AIC1952	AIC1953		

Highlights

- **Focused Products**
  - AIC2865 – 5A HVB in SOP8-EP, HLLη, pin-compatible with TPS54528
  - AIC2832 – 2A HVB in SOT23-6, HLLη, pin-compatible with MP1470/TPS56220x
  - AIC2833 – 3A HVB in SOT23-6, HLLη, pin-compatible with MP1471/TPS56320x
  - AIC2259 – 1A LVB in SOT23-8, HLLη, AOT, pin-comp. with MP2159
  - AIC2256 – 1A LVB in SOT23-8, HLLη, AOT, 3MHz Frequency, pin-comp. with MP2159
  - AIC2253 – 1A LVB in SOT23-8, HLLη, AOT, 8uA Low Iq, pin-comp. with MP2159
  - AIC2262 – 2A LVB in SOT23-8/DFN8, HLLη, AOT, pin-comp. with MP2161
  - AIC6156/52/51 – 3A/2A/1A UPS in SOP8-EP and SOT23-6, 1.3uS Fast SCP, ±7~15% current accuracy
- **Advanced Technology**
  - AOT (Adaptive On-Time Control) –
    - ***Higher*** light-load eff., ***Smaller*** ripple V., ***Faster*** transient
  - Low Iq – Power-saving, extending battery life, 30uA -> 3uA -> 0.3uA (Q2 '17)
  - Fast Short-Circuit Response Time – 1.3uS


Mastering the POWER