FDT RFID POWER WIRELESS

α6

Transmission IC for Wireless Power Supply System **Rev 1.1, 2018/12/20**

FEATURES

- **Compliant FDT protocol system V6.0 and meet AEC-Q100**
- **Strengthen the anti-noise processing capabilities**
- **Wide range of input voltage (5~24V)**
- **Efficiency up to 90%**
- **Simplify hardware design circuit**
- **Implement protective alarm (OVP, UVP, OCP, OPP, FOD)**

APPLICATIONS

- **Industrial Mobile device (Laptop, tablet, electrical tools, camera, machine arm)**
- **Vehicle (AGV, Drone, self-driving car, electrical motorcycle)**
- **Robots for service, clean, cart, produce**
- **Cable connector for non-metal interface (paper, wood, water, glass, plastic)**
- **Under-water device (lighting, sensor, sonar detector, GPS buoy)**

IC PIN FUNCTION

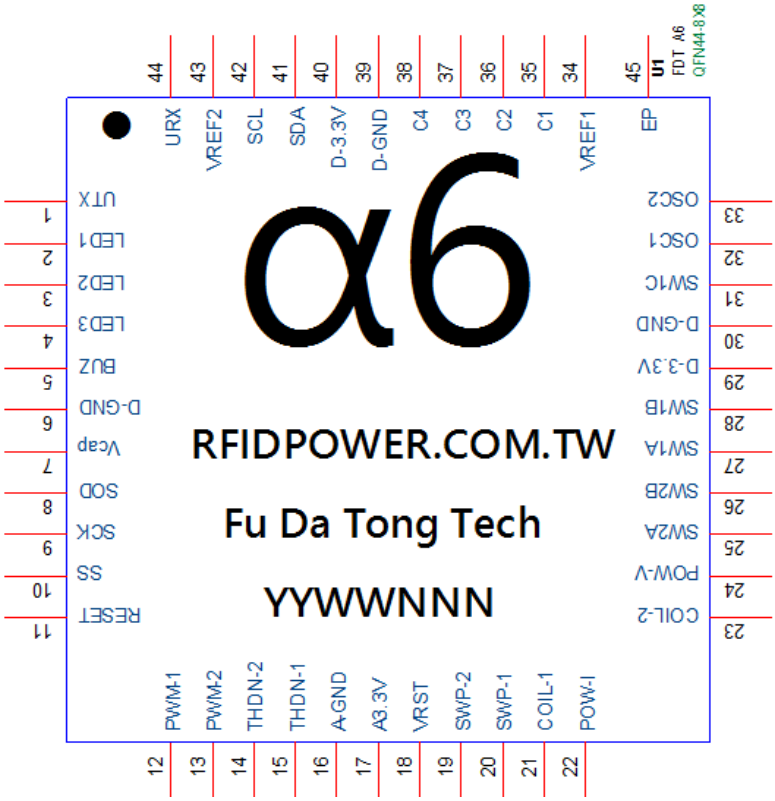

PIN FUNCTIONS

Pin #	Name	Sort	Description
1	UTX	Digital output	UART 與電腦連線更新韌體使用 (F/W used) For update of firmware by connection between UART and computer.
2	LED1	Digital output	輸出電壓驅動 LED 發光顯示狀態 The luminescent display status that outputs voltage to drive LED
3	LED2	Digital output	輸出電壓驅動 LED 發光顯示狀態 The luminescent display status that outputs voltage to drive LED
4	LED3	Digital output	輸出電壓驅動 LED 發光顯示狀態 The luminescent display status that outputs voltage to drive LED
5	BUZ	Digital output	輸出電壓驅動蜂鳴器 Buzzer 開關 Output voltage to drive Buzzers' switch
6	D-GND	POWER	數位電源地 Digital Ground Digital Ground
7	Vcap	POWER	IC 內核電源穩壓電容
8	SOD	Digital output	外接顯示模組通訊資料 SPI Protocol External display module for communication data SPI Protocol
9	SCK	Digital output	外接顯示模組通訊時脈 SPI Protocol External display module for communication clock SPI Protocol
10	SS	Digital output	外接顯示模組通訊致能 Slave selected External display module for communication enable Slave selected
11	RESET	Digital output	外接顯示模組通訊重置訊號 External display module for communication reset signal
12	PWM-1	Digital output	線圈驅動訊號 1(Coil driver 1) Coil drive signal
13	PWM-2	Digital output	線圈驅動訊號 2(Coil driver 2) Coil drive signal
14	THDN-2	Digital input	驅動元件溫度檢測訊號輸入 2 (Thermal detection 1) Thermal detection for signal input of drive elements 1
15	THDN-1	Digital input	驅動元件溫度檢測訊號輸入 1 (Thermal detection 2) Thermal detection for signal input of drive elements 2
16	A-GND	POWER	類比電源接地 Analog Ground Analog power ground

17	A-3.3V	POWER	類比電源 Analog power Analog power
18	VRST	Digital input	硬體重置輸入 Reset Hardware reset input
19	SWP-2	Analog input	驅動元件輸出電壓量測 2 (Coil voltage detection 2) Output voltage measurement 2 for drive elements
20	SWP-1	Analog input	驅動元件輸出電壓量測 1 (Coil voltage detection 1) Output voltage measurement 1 for drive elements
21	COIL-1	Analog input	線圈訊號量測輸入 1 Measurement input for coil signal 1
22	POW-I	Analog input	直流電源電流量測輸入 Measurement input for DC supply current
23	COIL-2	Analog input	線圈訊號量測輸入 2 Measurement input for coil signal 2
24	POW-V	Analog input	直流電源電壓量測輸入 Measurement input for supply voltage
25	SW2A	Digital input	按鍵偵測輸入 2A (Switch key detection) Key detection input 2A
26	SW2B	Digital input	按鍵偵測輸入 2B (Switch key detection) Key detection input 2B
27	SW1A	Digital input	按鍵偵測輸入 1A (Switch key detection) Key detection input 1A
28	SW1B	Digital input	按鍵偵測輸入 1B (Switch key detection) Key detection input 1B
29	D-3.3V	POWER	數位電源輸入 Digital power input
30	D-GND	POWER	數位電源地 Digital power ground
31	SW1C	Digital input	按鍵偵測輸入 1C Key detection input 1C
32	OSC1	Oscillator	振盪器引腳 1 (Crystal pin1) Oscillator pin 1
33	OSC2	Oscillator	振盪器引腳 2 (Crystal pin2) Oscillator pin 2
34	VREF1	Analog output	訊號處理參考電壓輸出 Signal processing reference voltage output
35	C1	Digital output	內部比較器狀態輸出 1 (Internal comparator output) Internal comparator output 1
36	C2	Digital output	內部比較器狀態輸出 2 (Internal comparator output)

			Internal comparator output 2
37	C3	Digital output	內部比較器狀態輸出 3 (Internal comparator output) Internal comparator output 3
38	C4	Digital output	內部比較器狀態輸出 4 (Internal comparator output) Internal comparator output 4
39	D-GND	POWER	數位電源地 Digital Ground
40	D-3.3V	POWER	數位電源輸入 Digital power input
41	SDA	Digital output	I2C 通訊協定資料端 Data of I2C communication protocol
42	SCL	Digital output	I2C 通訊協定時脈端 Clock of I2C communication protocol
43	VREF2	Analog input	訊號處理參考電壓輸入 Signal processing reference voltage input
44	URX	Digital input	UART 與電腦連線更新韌體使用 (F/W used) For update of firmware by connection between UART and computer.

ABSOLUTE MAXIMUM RATINGS

Parameter	Value		Units
	Min	Max	
Working environment temperature	-40	+125	℃
Storage temperature	-65	+150	℃
Relative voltage of Vdd pin to Vss pin	-0.3	+3.5	V
Relative voltage of other pins to Vss pin	-0.3	Vdd+0.3	V
Largest input current of Vdd		300	mA
Largest output current of Vss		300	mA
Largest output current of other pins		200	mA

ELECTRICAL CHARACTERISTICS

Parameters	Symbol	Condition	Min	Typ	Max	Units
Operating Voltage	Vdd	Standard (1)	3.0	3.3	3.5	V
Supply Current (Standby)	I	Standard (1)		10	20	mA
Supply Current (In operation)	I	Standard (1)		50	100	mA

(1) Design for typical use of circuit

Marking Details

● : Pin 1 indicator

α6 : A6 TX, Product Name

RFIDPOWER.COM.TW

FuDaTong Tech : Company Name

YYWWNNN : Date code 出廠 Year / Week / Batch number

MSL Results To J-STD-020C Profile Pass MSL1/260C

ORDERING INFORMATION

Part Number	Package	Top Marking	Free Air Temperature (TA)
FDT-A6TX-QFN44	QFN44 (8*8mm)	α6	- 40℃ TO + 125 ℃

PACKING INFORMATION

Part Number	Package	Packing	Single Purchase Quantity
FDT-A6TX-QFN44	QFN44 (8*8mm)	TAPE & REEL	1000 PCS

Reference schematic

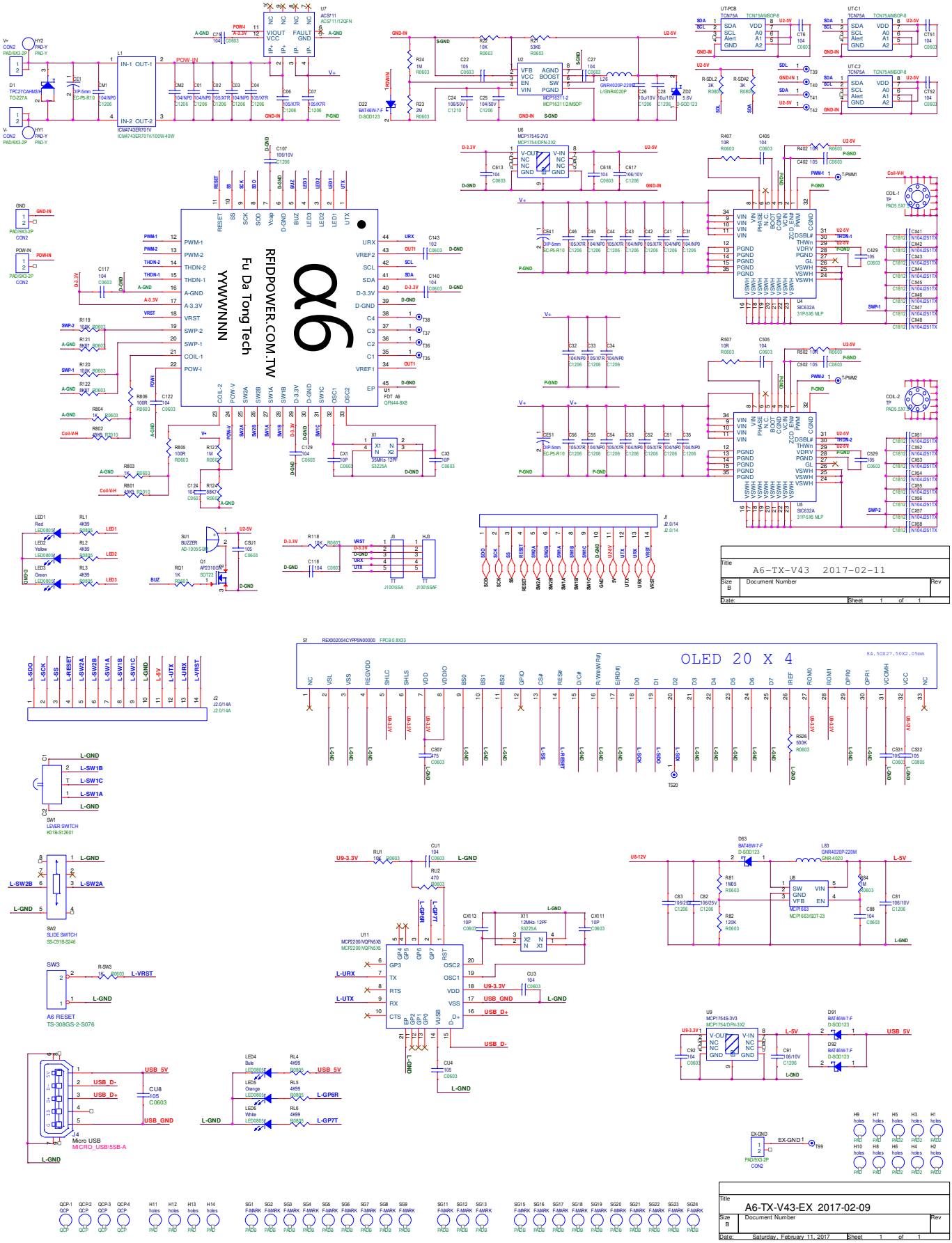

OPERATION

D-3.3V & A-3.3V & D-GND & A-GND

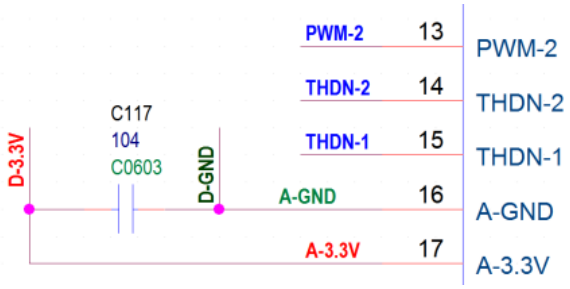

A6 使用 3.3V 直流電源, 一般運作下消耗電流 60mA . 其中主要消耗電力為 D 3.3V. 而 A-3.3V 為 IC 內部類比訊號處理使用. 此電壓也作為類比參考電壓, 該電壓需精確維持在 3.3V , 若有偏差會造成相關量測數值與真實量不相符的狀況. 在實作電路上數位與類比電源 PCB 布局應該分離,避免數位訊號中高頻雜訊進入類比電源之中.

A6 uses 3.3V DC power supply, consuming the current of 60mA under normal operation. The main consumption of power is D 3.3V. A-3.3V is for the IC internal analog signal processing. This voltage is also used as analog reference voltage, which must be precisely maintained at 3.3V. If it deviates, it will cause the relevant measurement values to be inconsistent with the actual measurement. Regarding the implementation of circuit, PCB layout for digital and analog power supply should be separated to prevent the high-frequency noise from entering the analog power supply in digital signals.

Vcap

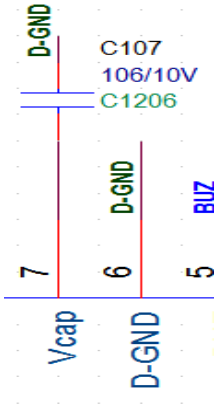

A6 內核為高速 DSP 處理器採用 1.8V 工作電壓, 該電路需要穩壓電容,透過 Vcap 連接,該電容建議值為 10uf 使用 X7R 材質,操作電壓為 1.8V 故採用耐壓 6.3V 以上即可. 該端點於運作中量測電壓為 1.8V,若偏差太多即為故障狀況.

A6 core is that a high-speed DSP processor adopts 1.8V operating voltage. The circuit needs to stabilize the capacitor, connecting through the Vcap. The capacitor of the recommended value is 10uf, using X7R materials with the operating voltage of 1.8V. Therefore, it uses more than 6.3V permissible voltage. The endpoint's voltage measures 1.8V in the operation. If it deviates too much, it means failure.

OSC1 & OSC2

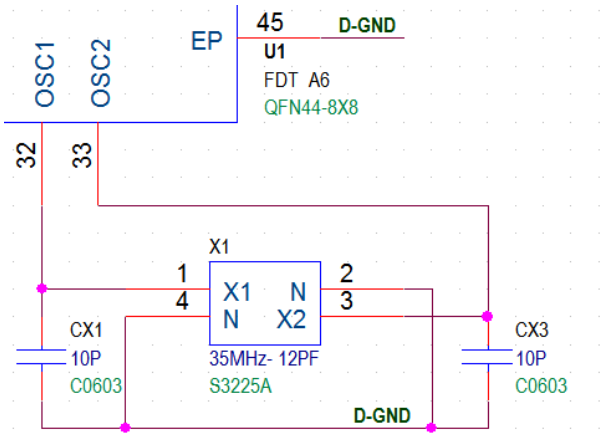

本 IC 運作為維持高性能運作需要準確之工作頻率, 在此為採用 35MHz 石英振盪晶體. OSC1 為工作頻率輸入端, OSC2 為反向驅動器. 若是使用外部振盪源就將工作頻率輸入 OSC1 即可,OSC2 可以空接

To maintain the high-performance operation, the IC needs a precise operating frequency. Therefore, 35 MHz crystal oscillator is used. OSC1 is the input of the operating frequency, and OSC2 is the reverse drive. If the external oscillator source is used, input the operating frequency into OSC1, and OSC2 can be empty.

VRST

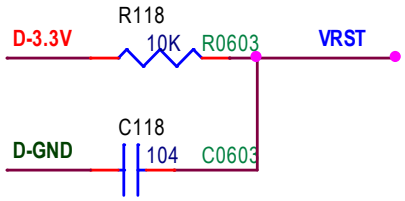

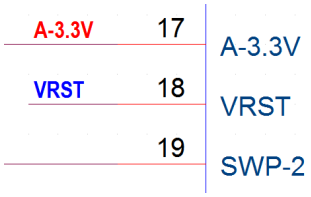

硬體重置接腳,通電後本腳需要輸入高電位 D-3.3V 後開始運作,為確認電路於上電完成後在開始運行所以配置上做 R-C 電路延遲啟動,於運作過程將此端點下拉到 GND 後進行重置.

Hardware resets the pin. After power-on, the pin needs to be inputted D-3.3V high potential and starts to operate. To confirm the circuit is completed to power on and then starts to operate, so delay to start the RC circuit is configured. In the process of the operation, this endpoint is pulled down to GND before resetting.

POW-V

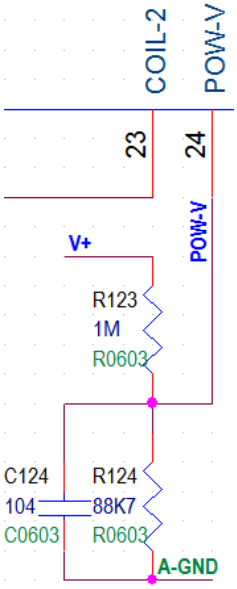

本系統中輸入直流電源電壓量測端點，此端點量測為系統運行重要數值.該端點需要搭配分壓電阻上端(R123) 1MΩ 與下端 (R124)88.7KΩ分壓量測. 搭配旁路電容(C124) 0.1uF 該端點電壓量測滿值為 3.3V，分壓電阻上端量測上限為 40V， 內部為 12Bit ADC，換算有效解析度為 10mV.

In this system, DC power supply voltage is inputted to the measure endpoint. The measurement of the endpoint is the important value for the operation of the system. The endpoint needs to be divided working with the upper divider resistance of (R123) 1MΩ and the lower which of (R124) 88.7KΩ. The endpoint voltage measurement, working with bypass capacitor of (C124) 0.1uF, of full value is of 3.3V. The upper limit of measurement of the upper divider resistance is 40V, the internal 12Bit ADC. The conversion of effective resolution is 10mV.

PWM-1 & PWM-2

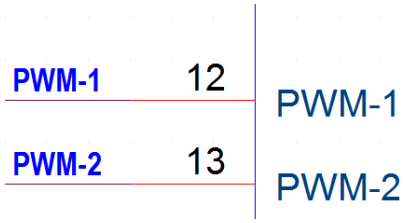

驅動訊號出端，本系統為驅動開關元件推動線圈與電容產生諧振發送無線電力.採用全橋式驅動架構，設計中推薦使用整合型 DrMOS，本端口輸出為 3.3V 邏輯電壓，故選用開關元件務必注意接收訊號為 3.3V 邏輯電壓之產品

It drives signal output. The system is drive switch elements launch the coil and capacitors to generate resonance to send wireless power, using full-bridge drive architecture. Integrated DrMOS is recommended to use in design. The port output is 3.3V logic voltage, so be sure to note that the received signal is the product with 3.3V logic voltage when selecting switching elements.

POW-I

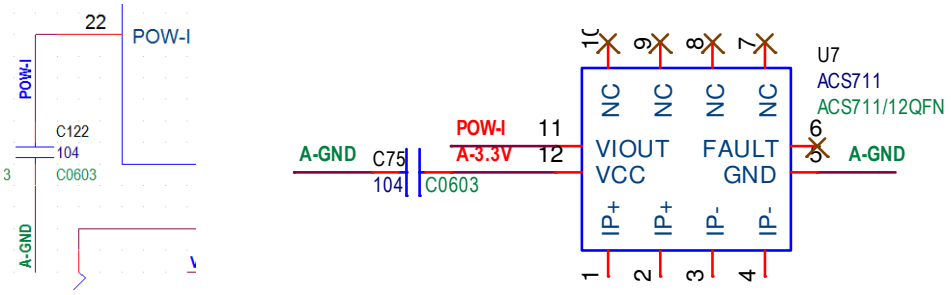

本系統電流量測為搭配 Allegro MicroSystems - ACS711 進行運作，該端點與上電後. 電流為零時電壓值為 Vcc / 2，在系統設計中 Vcc 為 3.3V，每次通電後於驅動元件工作前都會先進行零電流準位擷取,後續運作電流偵測再以開機當時的電流準位增加值進行電流值換算,該電流值於系統中作為 OCP OPP 之保護監控所使用.該端點訊號極為敏感,電路上布局需要注意 ACS711 到 A6 間的路徑上干擾,於 A6 端口旁並聯一個 0.1uF 旁路電容濾除雜訊.

The current measurement of this system is operated with Allegro MicroSystems - ACS711. After the endpoint and connecting to power, the voltage is Vcc / 2 when the current is zero. In the design of the system, Vcc is 3.3V. After powering on each time, the driving elements will carry out the protection control zero current level retrieve before operating. Subsequently, perform the current detection, and then convert the current values according to the added values of the current level that turn on the machine then. The current values are used for the protection and the monitoring of the OCP OPP in the system. The signal in the endpoint is very sensitive. The layout of the circuit needs to pay attention to the interference in the path between ACS711 and A6. A 0.1uF bypass capacitor is connected in parallel next to the A6 port to filter noise.

THDN-1 & THDN-2

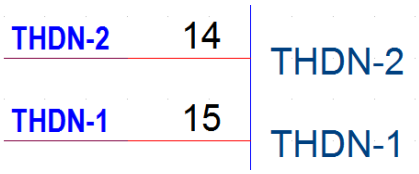

DrMOS 配備有溫度狀況輸出,該端點為溫度過高時會下拉電位. 本端口內部有上拉電壓功能,連接於 DrMOS THDN 端口用以監控溫度，當溫度過高下拉電位系統即停止輸出. 本端口不使用可以空接.
DrMOS is equipped with a temperature condition output. If the temperature is too high, the endpoint will pull down the potentials. The port has the function of pull-up voltage, connecting to the DrMOS THDN port to monitor the temperature. When the temperature is too high, pull-down system will stop the output. The port is not empty.

SWP-1 & SWP-2

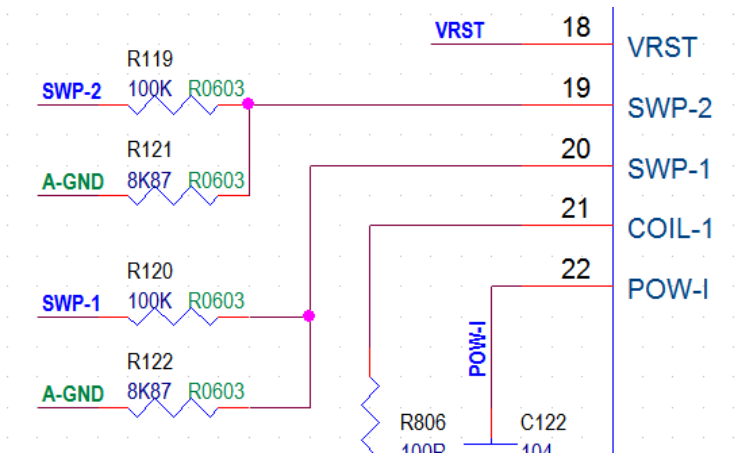

用來量測驅動元件輸出之電壓，SWP-1 SWP-2 為範例電路中驅動元件之 U4 U5 之輸出電壓，其電壓為開關訊號，理想狀況下其開關訊號之高電位輸出應該與輸入電源相等.實際因負載效應其電壓會略低於輸入電源電壓,此端點為監控開關元件驅動效能所使用. 若開關元件故障有可從此端點進行判別.

SWP-1 and SWP-2 are used to measure the output voltage of driving elements. SWP-1 and SWP-2 are the output voltages of U4 and U5 of the drive elements in the example circuit, whose voltage is the switching signal. Ideally, the high potential of its switching signal should be equal to the input power supply. Actually, because of load effect, the voltage will be slightly lower than the input supply voltage, which is used to monitor the drive performance of the switching elements. If the switching elements fail, determination can be performed from this endpoint.

VREF1 & VREF2

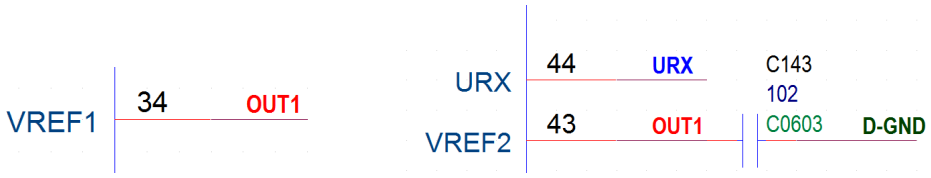

內部參考電壓從 VREF1 輸出後再從 VREF2 輸入，線圈訊號處理之參考電壓輸出後搭配穩壓電容 1Nf (102) 進行穩壓，該端點最大電壓為 3V，推薦使用 X7R 或 NP0 材質之電容，注意電容值為指定 102，搭配過大的電容會使訊號運作不穩定.

The internal reference voltage outputs from VREF1 and then inputs from VREF2. After the reference voltage output of coil signal is processed, the voltage is regulated by voltage regulator capacitor 1Nf (102). The maximum voltage at the endpoint is 3V. It is recommended to use X7R or NP0 material capacitors. Note capacitance value is the specified 102, using too large capacitance will make the signal operation unstable.

COIL-1 & COIL-2

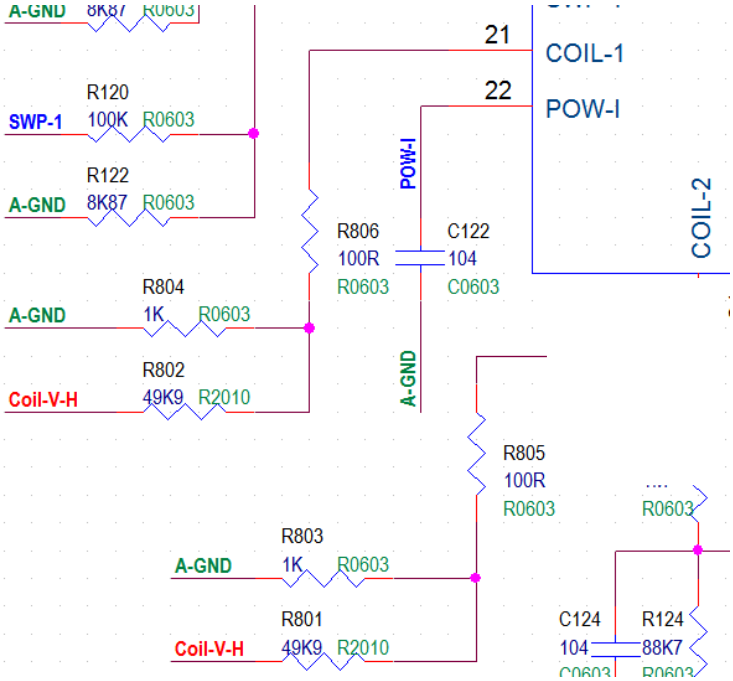

線圈訊號量測為本系統運作最重要數值,由於線圈訊號量測若失誤會導致電路損毀,故本系統中採用雙迴路偵測,兩個端點之訊號比需相符才能正常運作.該端點與線圈電壓連接是透過上端 (R801 & R802) 49.9K Ω 與下端電阻 (R803 & R804) 1KΩ 進行分壓, 由於線圈端點為高電壓訊號, 故 R801 R802 會承受較大功率, 系統設計於線圈電壓最大 200V p-p 值下建議 R801 R802 要有 1W 的功率承載能力. 另外此端點為交流訊號量測不需加旁路電容, R805 R806 為端口限電流保護用.建議值為 100Ω. 本端口內部為複合型類比電路, 同時有 ADC 比較器與 OPA 協同運作.

Coil signal measurement is the most important value in the operation of the system. If the coil signal measurement is incorrect, it will lead to damage to the circuit. Therefore, the system uses dual-loop detection. The signal ratio of the two endpoints needs to be consistent, they will operate normally. The voltage connection between endpoint and coil is divided through the upper (R801 & R802) 49.9K Ω and the lower resistance (R803 & R804) 1KΩ. Because the endpoint of the coil is the high voltage signal, R801 R802 will withstand greater power. The system is designed to recommend R801 R802 have 1W of power carrying capacity with the maximum value of 200V pp of the coil voltage. In addition, this endpoint is the measurement for the AC signal without needing bypass capacitors. R805 and R806 are used to protect the port current limit. Recommended value is 100Ω. The interior of the port is the complex analog electronics with the collaboration of ADC comparator and OPA at the same time.

C1 & C2 & C3 & C4

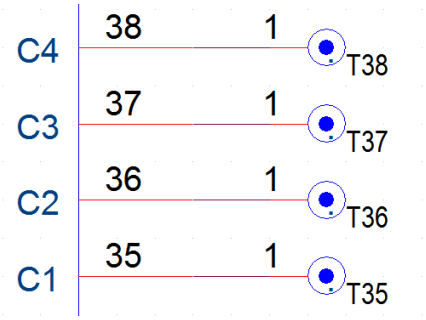

內部比較器狀態輸出檢測腳,用於深層分析訊號問題所使用,電路實作將其空接, 搭配檢測點為選擇性添加.

Output detection pin for internal comparator status is used for deep analysis of signal problems. In the circuit Implementation, it is empty. The detection point is optional.

SOD & SCK & SS & RESET

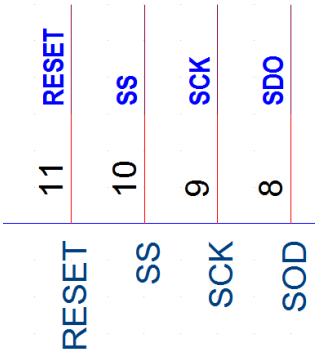

本系統搭配 REX002004CYPP5N00000 (Raystar Optronics, Inc.) 做為顯示運作內容使用. 其通訊內容與該面板內部 IC SSD1311 (Solomon Systech Limited) 相容, 採用 1MHz 運作之 SPI 介面進行顯示內容傳輸, 本區端口為工程開發或檢驗搭配顯示面板使用,不使用時可空接.

This system is used for showing operation content working with REX002004CYPP5N00000 (Raystar Optronics, Inc.). Its communication contents are compatible with the IC SSD1311 (Solomon Systech Limited) inside the panel, using the SPI interface operated by 1MHz to display the content transmission. The port in this area is used for engineering development or inspection with the display panel. When it is not in use, it can be empty.

SDA & SCL

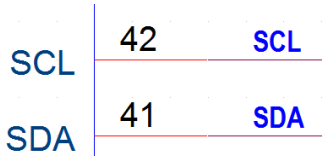

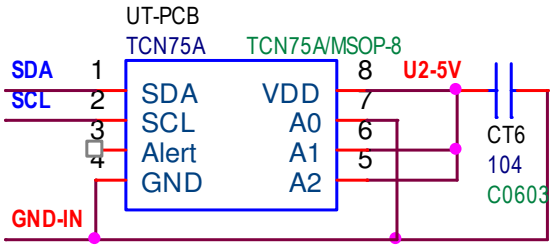

本系統溫度管理為透過 I2C 介面連接溫度感測 IC TCN75A (MICROCHIP)，若無使用溫度感測可將此端口空接.

The temperature management of the system is connected to the temperature sensing IC TCN75A (MICROCHIP) through the I2C interface. If the temperature sensing is not used, the port can be empty.

SW2A & SW2B

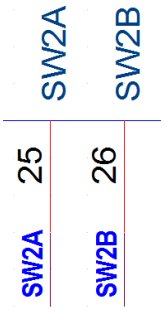

工作模式選擇開關， 本端口為 IC 工作模式選擇，內部上拉高電位，一般工作模式將此端口空接.
It is the operating mode selector switch. The port is operating mode selection for IC, which pulls up the potential internally. The port is empty in the general operating mode.

SW2A	SW2B	Function
H	H	RUN-1
L	H	RUN-2
H	L	SET

H:高電位 (空接) High potentials (empty) L:接地 Ground

SW1A & SW1B & SW1C

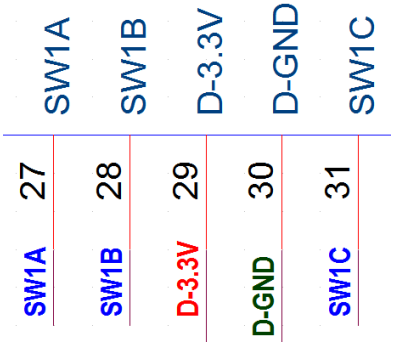

搭配顯示面板之旋鈕使用, 1A 1B 為左右旋選擇值 1C 為下壓確認鈕. 本端口為內部上拉, 接地接點進行操作.

It is used for going with the knob on the display panel. 1A 1B are selection values by the left and right rotation. 1C is the button to confirm to press. The port is the internal pull-up, operating with ground and contact.

UTX & URX

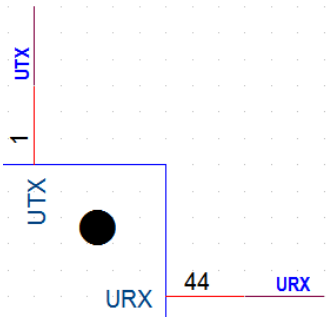

搭配本公司推出 PC 端更新程式,透過 RS-232 (UART) 進行更新使用, 注意本 UART 介面位 3.3V , 若使用其他 UART 電壓需要透過電壓轉換器.

Working with the update program of PC rolled out by the company, updating through RS-232 (UART). Note that the potential of UART interface is 3.3V. If other UART voltage is used, converting it through voltage converter is needed.

EP

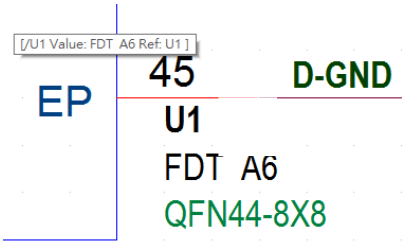

底部焊盤, 請與數位接地相連接,保持最佳運作效能。

Please connect the pad at the bottom to the digital ground to maintain optimum operational performance.

LED1 & LED2 &LED3

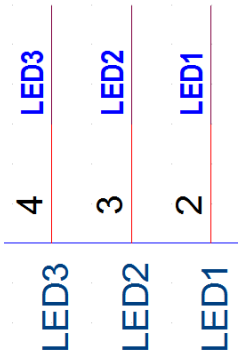

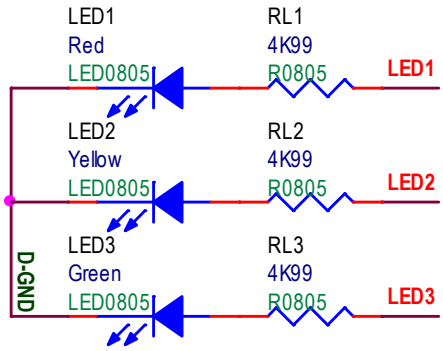

輸出顯示系統狀態使用，接 LED 顯示需要串連限流電阻,最大電流限制為 10mA.

Used for output and display of system conditions. Current-limiting resistor is needed when connecting to LED to display. The maximum current limit is 10mA.

BUZ

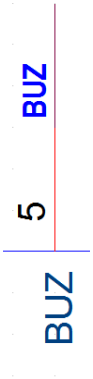

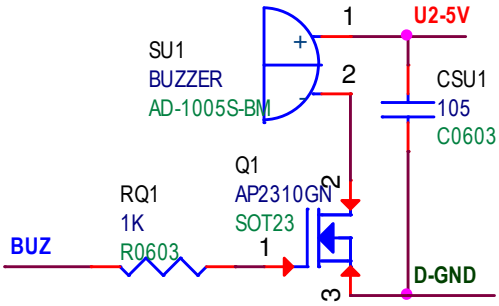

本端口為蜂鳴器開關訊號，要啟動時以高電位 3.3V 邏輯訊號輸出非直接提供電力給蜂鳴器適用.需搭配開端電路用以開關蜂鳴器。

This port is the buzzer switch signal. When starting, it outputs logic signal with a high potential 3.3V, instead of directly supplying the power to the buzzer. The buzzer needs to be switched by using start circuit.

Display introduce of setting board

PAGE 1 - 開機狀態顯示 Power-on status display

Boot V+ 4.94V	開機電壓顯示,此電壓需在設定區間內才會繼續運行. Power-on voltage display. The voltage needs to be set in the rage and then it will continue to operate.
LC RESONANRT	開機偵測到 TX 線圈與電容構成之諧振頻率 Resonant frequency composed of TX and capacitors detected during power-on
Pow-ON Self-Test →OK	開機自我檢測通過 Self-test pass as power-on
FuDaTong A6-TX	產品名稱 Product name
#qbq	軟體版本編號 Software version number

PAGE 2 - 主運行狀態顯示 Main operation status display

>FOD<	金屬異物偵測已啟動（ 訊號已鎖定 ） Metal foreign body detection has been started (Signal has been locked)
[FDT]	運行於 FDT 高功率模式 High power mode running in FDT
4.97V	電源電壓 Supply voltage
0.02A	輸入到開關驅動元件之電流 Current inputting into switch drive element
0.0 W	驅動元件輸出功率 Drive element output power
COIL 12.7V	線圈輸出電壓 此為交流電壓峰對峰值 The coil output voltage, which is the peak-to-peak value of the AC voltage
1%	驅動線圈推力使用比率 Thrust ratio of drive coil

98.5KHz 目前運行驅動工作頻率
Drive operating frequency run currently

Search .. 搜尋接收端中 Searching and receiving

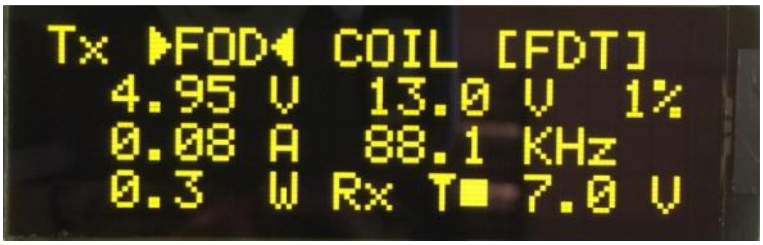

Rx T■ 接收端感應訊號狀態 方框為訊號良好 9~1 數字表示
Sensor signal status at receiving side. If box is shown, it means the signal is good, with 9~1 shown.
1 為訊號最差 低於 1 則關閉功率輸出
1 is the worst signal. Turn off the power output if less than 1.

7.0V RX 端整流器後方直流電壓
DC voltage behind rectifier at RX side

PAGE 3 - 系統限制值顯示 System limit value display

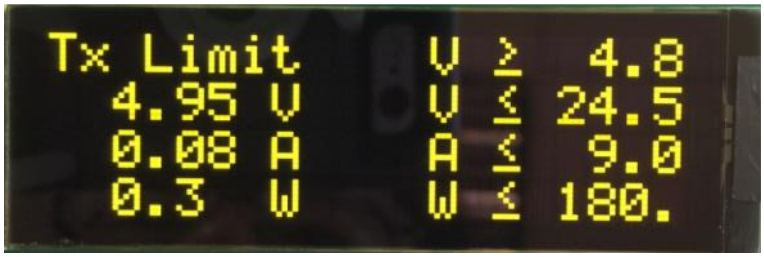

4.95V 現行電源電壓 Existing Supply voltage
0.08A 現行電源電流 Existing supply current
0.3 W 現行電源功率 Existing source power
V≧4.8 電源限制最小電壓 Minimum voltage of power supply limits
V≦24.5 電源限制最大電壓 Maximum voltage of power supply limits
A≦9.0 電源限制最大電流 Minimum current of power supply limits
W≦180. 電源限制最大功率 Maximum current of power supply limits

PAGE 4 - 輸入電源監控顯示 Input power monitoring display

Pow-IN Monitor 輸入電源監控 Input power monitoring

Idle 4.97V 待機無功率輸出期間 偵測電源電壓
Detection of supply voltage on standby without power output

Load 4.95V 有輸出驅動期間 偵測電源電壓
Detection of supply voltage during output drive

Loss 0.02V 推算導線損失電壓
Calculate loss voltage of the wire

▲0.00V 短時間內電壓變化量
Voltage change over a short period of time

@0.02A 紀錄最大電流值 Record maximum current values

>0.02V 紀錄於電流值最大時之導線損失電壓
Loss voltage of the wire is recorded when the current values are maximum.

PAGE 5 - 溫度偵測顯示 Temperature detection display

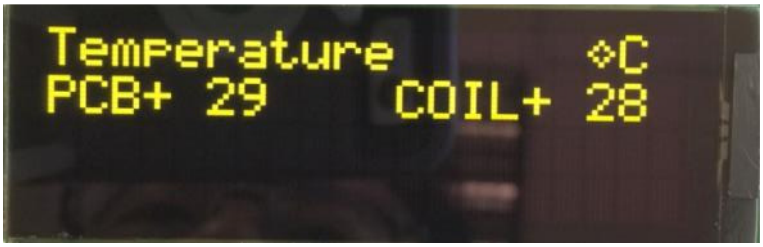

Temperature ℃ 溫度顯示 單位 攝氏 度
Temperature display unit Centigrade degrees

PCB+ 29 於 PCB 板端的溫度偵測
Temperature detection on PCB

COIL + 28 於 線圈端的溫度偵測
Temperature detection at the wire side

PAGE 6 - 諧振頻率顯示 (Resonant frequency) Resonant frequency display

L^C BOOT 開機時偵測線圈與電容組成之諧振頻率
The resonant frequency that is composed of wire and capacitors is detected when power-on

New PEAK 最新一筆偵測之諧振頻率
The latest resonant frequency detected

Limit-Lo 由最新一筆偵測諧振頻率 經計算後設定最低工作頻率
The minimum operating frequency is set by the latest detection of the resonant

frequency after calculation.

Find xnF　　線圈驅動達到掃描電壓之工作頻率

The operating frequency that the coil drive reaches the scan voltage

Run　　目前系統運行驅動頻率

The drive frequency that the system is running currently

PAGE 7 - LED 顯示狀態 (LED Status) LED Status

1Red　　LED1 紅色 Red　旁邊方塊為 0.1S 之點亮時序

Block next to LED is time sequence lit by 0.1S.

2Yellow　　LED2 黃色 Yellow

3Green　　LED3 綠色 Green

PAGE 8 - 腳位電位狀態 (Pin Level) Pin Level status

[25]2A=H　　A6 PIN 25　連接 SW2A 目前電位為 H　高電位

The current potential connected to SW2A is H high potential.

[26]2B=H　　A6 PIN 26　連接 SW2B 目前電位為 H　高電位

The current potential connected to SW2B is H high potential.

[20]BZ=L　　A6 PIN 20　連接 蜂鳴器目前電位為 L　低電位

The current potential connected to buzzers is L low potential.

[27]1A=H　　A6 PIN 27　連接 SW1A 目前電位為 H　高電位

The current potential connected to SW1A is H high potential.

[28]1B=H　　A6 PIN 28　連接 SW1B 目前電位為 H　高電位

The current potential connected to SW1B is H high potential.

[31]1C=H　　A6 PIN 31　連接 SW1C 目前電位為 H　高電位

The current potential connected to SW1C is H high potential.

PAGE 9 - 錯誤碼顯示 (Error Code Notice) Error Code Notice

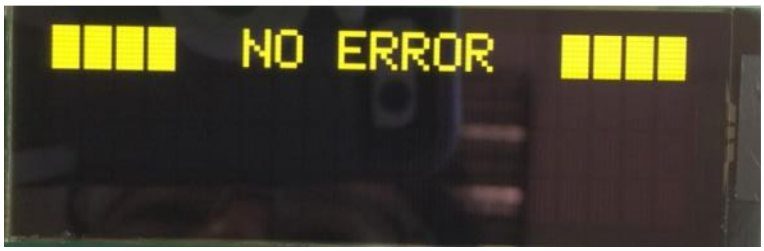

NO ERROR 系統正常運作時顯示沒有錯誤
No error when the system is working properly

ERRPR-2410 錯誤代碼(Error Code)
V+ Input Unstable 錯誤代碼說明 輸入電源不穩定
The error code indicates that the input power supply is unstable
After 2s1 Restarted 於 2.1 秒後重新啟動
Restart after 2.1 seconds

PAGE 10 - 金屬異物偵測狀態(Foreign Object Detection) Metal foreign body detection status

DETECT FOD 金屬異物偵測
Metal foreign body detection
METAL RATIO: 0.0% 偵測命中率 0.0% 無金屬異物 99.9%判為有金屬異物
Detect hit rate 0.0% No metal foreign body 99.9% Metal foreign body is determined
+1 偵測值 此值越大表示衰減斜率越大 有金屬異物可能性越大
Detection value The larger the value is, the greater the attenuation slope is. There

is a greater possibility of metal foreign body

#4 判別基礎值 由線圈電壓自動計算

The base value is determined automatically by the coil voltage

LEVEL→5 判別靈敏度 此值設定越大 靈敏度越低

Determine the sensitivity. The greater the sensitivity sets, the lower the sensitivity is

□9 判別界線=判別基礎值 4 +判別靈敏度 5

Determine the boundary = Determine base value 4 + Determine the sensitivity 5

偵測值大於界線就會累加到偵測命中率

The detection value is greater than the boundary will be accumulated to detect hit rate

>FOD< 金屬異物偵測已啟動（ 訊號已鎖定 ）

Metal foreign body detection has started (signal has been locked)

PAGE 0 - 運行計時器(Operation Counter)

Run:(Boot Counter) 開機計時器 通電後開始計時

Boot timer starts to measure time after power-on.

Rx: (RX counter) 接收端計時器於有受電端連結的時間 於感應後開始計時 離開後即清除

Timer at receiving side has the time to connect receiving end, starting to measure time after sensing, clearing after leaving.

計時時間從 0d00h00m00s00 ~ 999d23h59m59s9 到最大值後會清除

Measuring time is from 0d00h00m00s00 to 999d23h59m59s9, and the time will be cleared until the maximum value.

PACKAGE INFORMATION

8x8x0.9 mm Body –QFN 44-Lead Plastic Quad Flat, No Lead Package

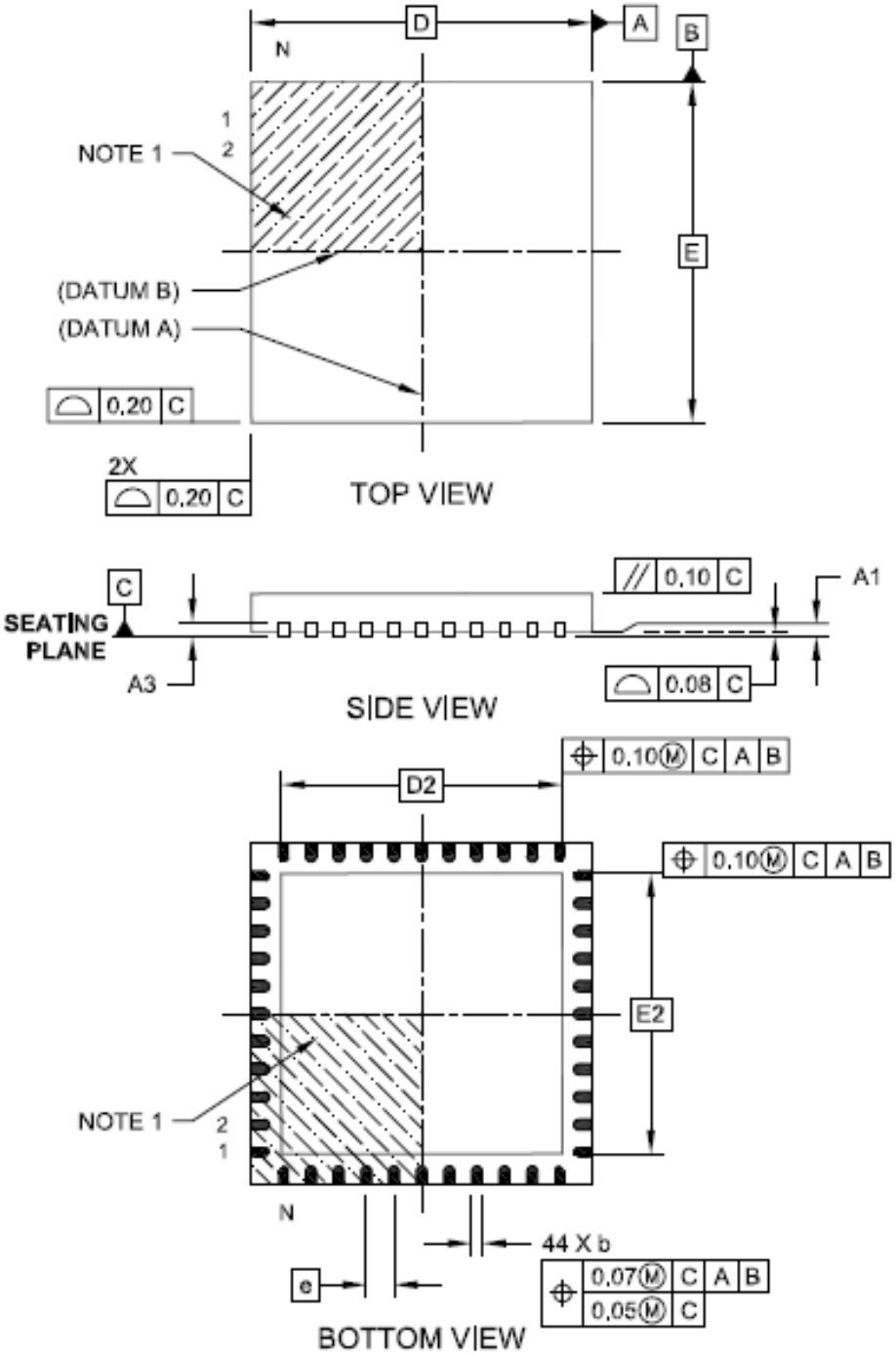

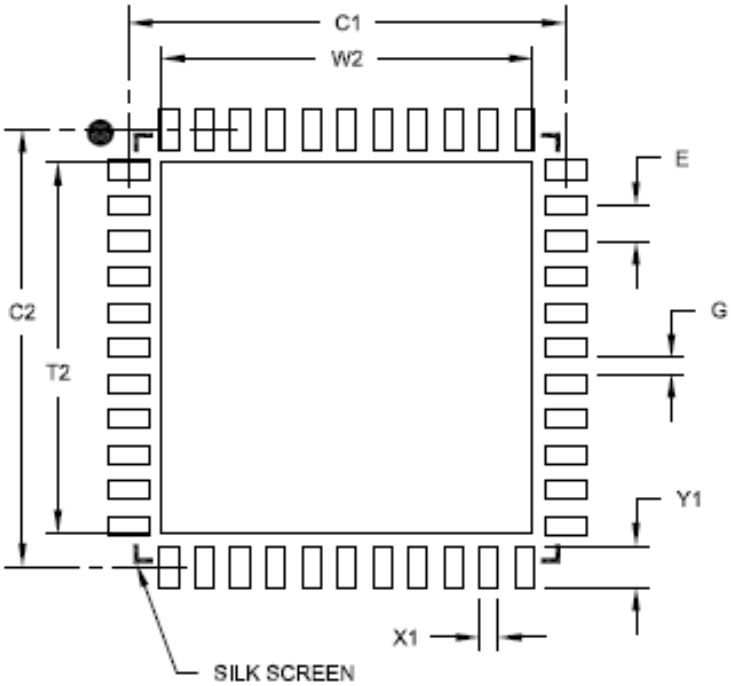

RECOMMENDED LAND PATTERN

Units		MILLIMETERS		
Dimension Limits		MIN	NOM	MAX
Contact Pitch	E		0.65 BSC	
Optional Center Pad Width	W2			6.60
Optional Center Pad Length	T2			6.60
Contact Pad Spacing	C1		8.00	
Contact Pad Spacing	C2		8.00	
Contact Pad Width (X44)	X1			0.35
Contact Pad Length (X44)	Y1			0.85
Distance Between Pads	G	0.25		

TAPE & RELL

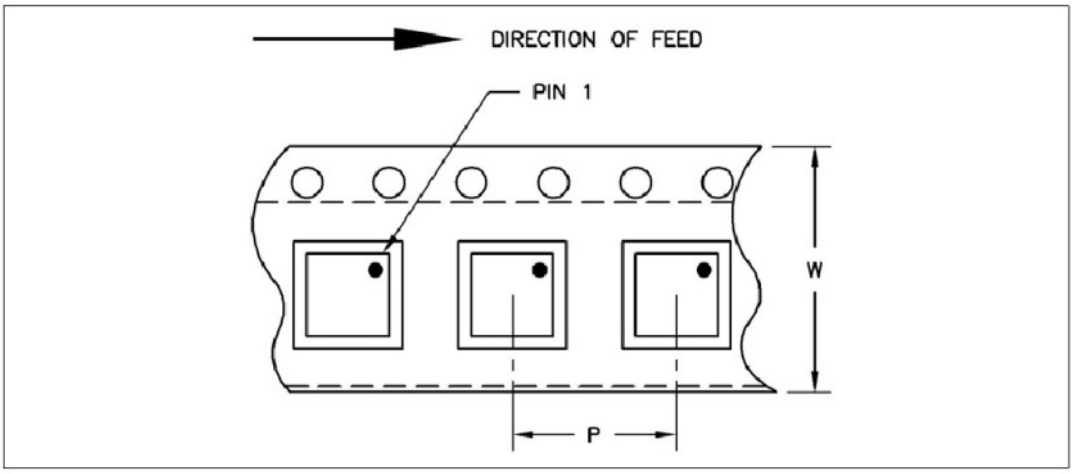

Reflow process

FIGURE 1: Sn/Pb TYPICAL REFLOW PROFILE

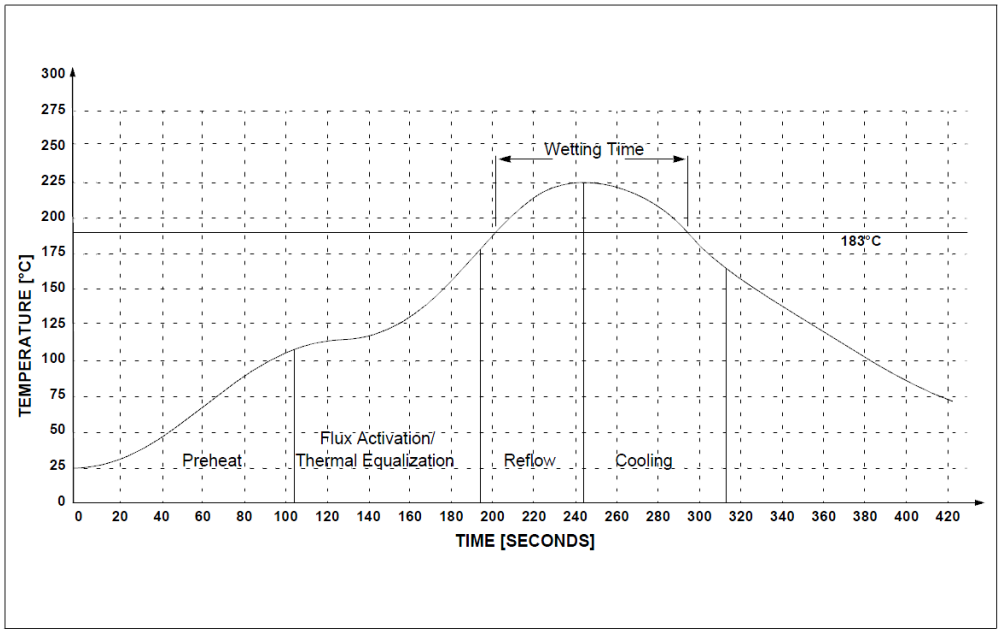

FIGURE 2: JEDEC REFLOW PROFILES FOR Sn-Pb AND Pb-FREE ASSEMBLIES

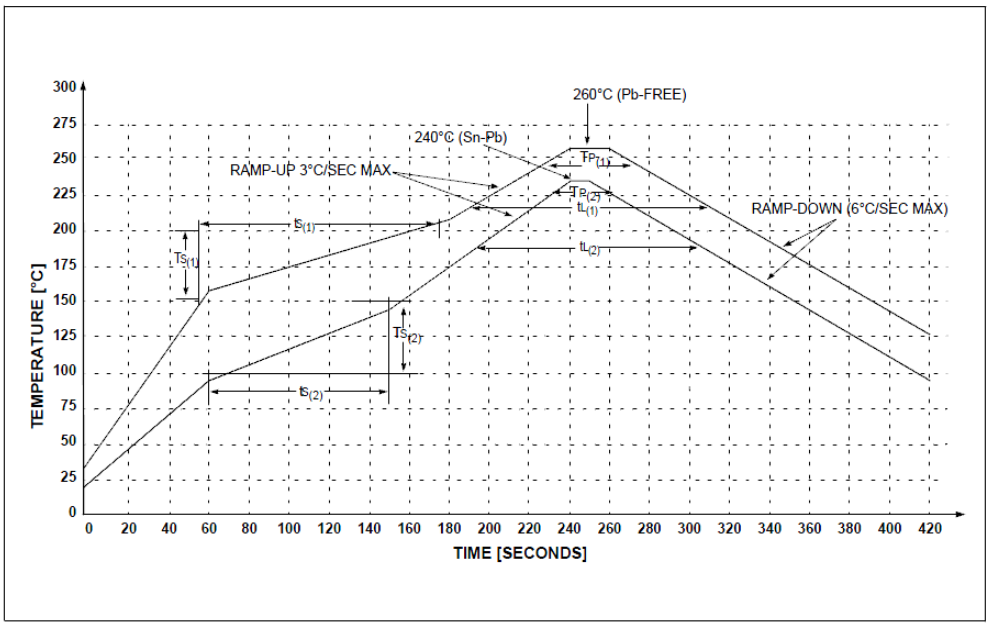

TABLE 1: TIME AND TEMPERATURE PARAMETRICS

Sym.	Min.	Max.	Units	Test Conditions
$Ts_{(1)}$	150	200	°C	Pb-Free
$Ts_{(2)}$	100	150	°C	Sn-Pb
$ts_{(1)}$	60	180	Sec	Pb-Free
$ts_{(2)}$	60	120	Sec	Sn-Pb
$tl_{(1)}$	60	150	Sec	Pb-Free
$tl_{(2)}$	60	150	Sec	Sn-Pb
$Tp_{(1)}$	245	260	°C	Pb-Free
$Tp_{(2)}$	225	240	°C	Sn-Pb

For reference, reflow conditions from IPC/JEDEC J-STD-020C are reproduced in Figure 2 and Table 1.

FIGURE 3: REFLOW PROFILE RECOMMENDATION (Pb-FREE)

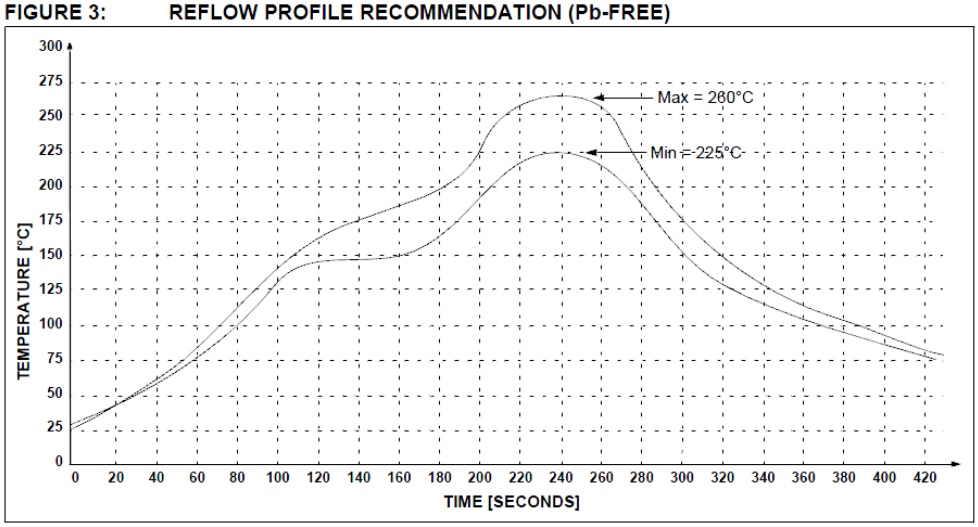

FIGURE 4: REFLOW PROFILE RECOMMENDATION (Sn/Pb)

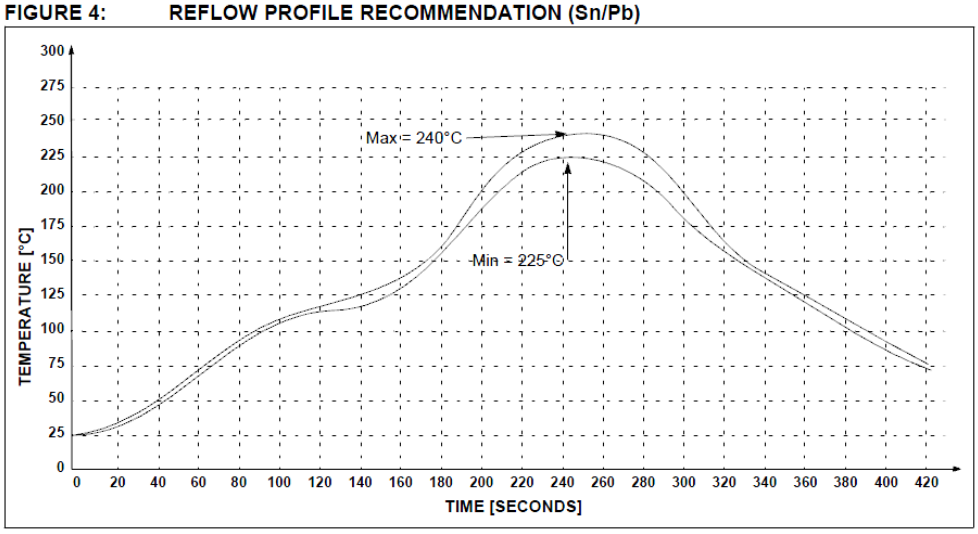

Fu Da Tong (FDT) Technology
WWW.RFIDPOWER.COM.TW
10F.-5, No.880, Zhongzheng Rd., Zhonghe Dist.,
New Taipei City 23586, Taiwan (R.O.C.)

